STATE	PROJECT NO.	YEAR	SHEET NO.	TOTAL SHEETS
KANSAS	87 N-0239-01	2004	16	47

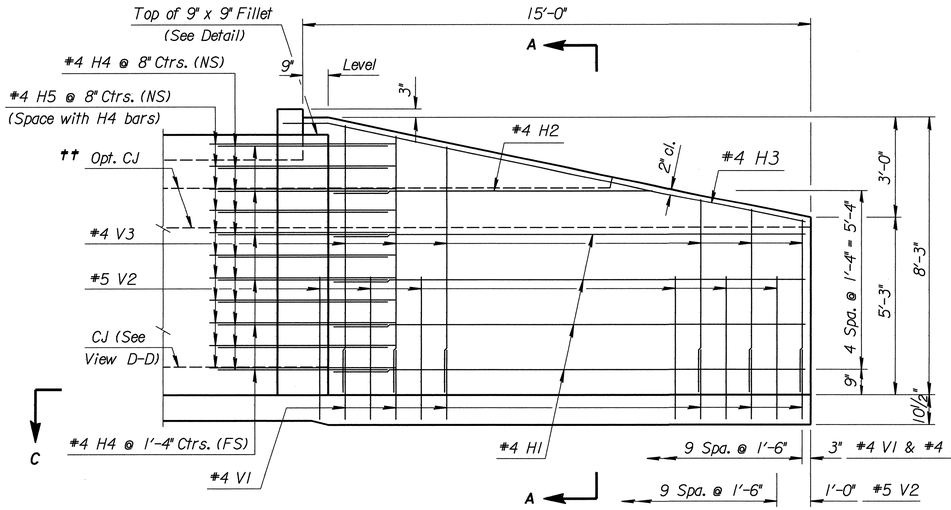

†† See RCB Details for location of construction Joint.

ELEVATION OF WINGWALL

(Backface Shown)

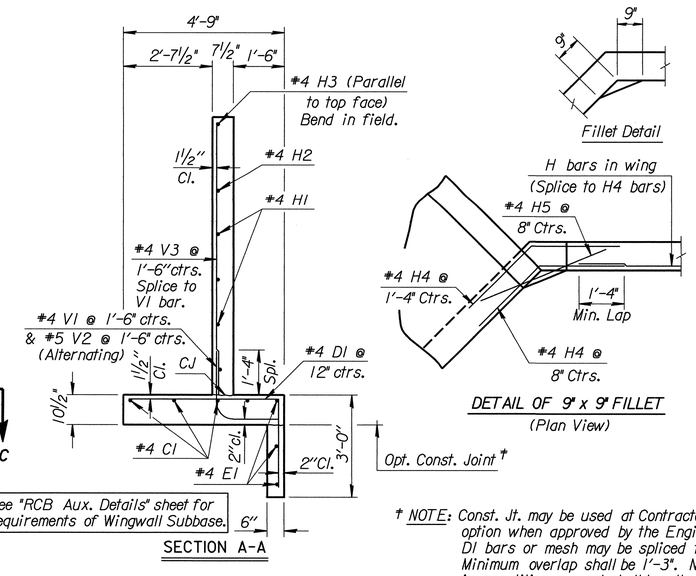

See "RCB Aux. Details" sheet for requirements of Wingwall Subbase.

SECTION A-A

† NOTE: Const. Jt. may be used at Contractor's option when approved by the Engineer. D1 bars or mesh may be spliced thus: Minimum overlap shall be 1'-3". No increase in quantities or cost shall be allowed when Contractor elects this option.

Fillet Detail

DETAIL OF 9" x 9" FILLET

(Plan View)

GENERAL NOTES

UNIT STRESSES: Class AAA Concrete; f'c = 4,000 p.s.i.
Reinforcing Steel; fy = 60,000 p.s.i.

CONCRETE: Class AAA Concrete shall be used throughout. Bevel all exposed edges with a ¾ inch triangular moulding.

REINFORCING: All reinforcing shall conform to ASTM A615, Grade 60. Welded Wire Fabric shall conform to ASTM A185. All dimensions relative to reinforcing steel shall be to center-line of bar unless otherwise noted.

QUANTITIES: Wingwall Quantities include all quantities outside the neat lines of the box, excluding the hubguard.

APRON: A 5" concrete slab shall be constructed between the downstream wings in locations subject to scour only when specified on the plans or by the Engineer. Wire Reinforcing mesh shall be electrically welded and shall be composed of 6 x 6-W1.4 x W1.4 welded wire fabric and shall be classified as pounds of reinforcing.

FOUNDATION AND BACKFILL MATERIAL: Soils judged as high plasticity clays, fat clays, expansive clays, or organic clays are unsuitable for foundation and/or backfill material for wingwalls and will not be used. Where these conditions exist, Foundation Stabilization and/or Granular Backfill (Wingwalls) shall be used as determined by the Engineer. See "RCB Auxiliary Details" sheet for additional details.

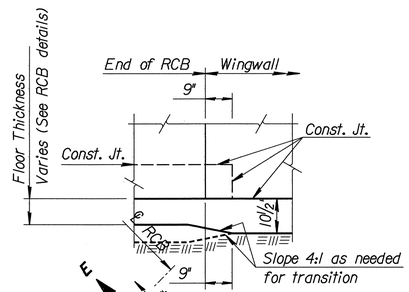

VIEW D-D

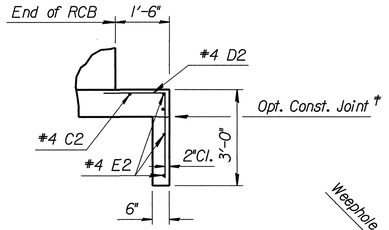

SECTION E-E

NOTE:
EF = Each Face
NS = Near Side
FS = Far Side
CJ = Const. Joint

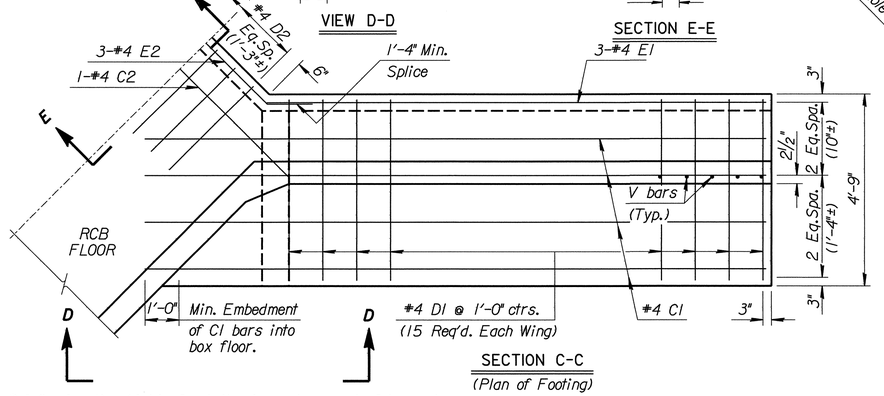

SECTION C-C

(Plan of Footing)

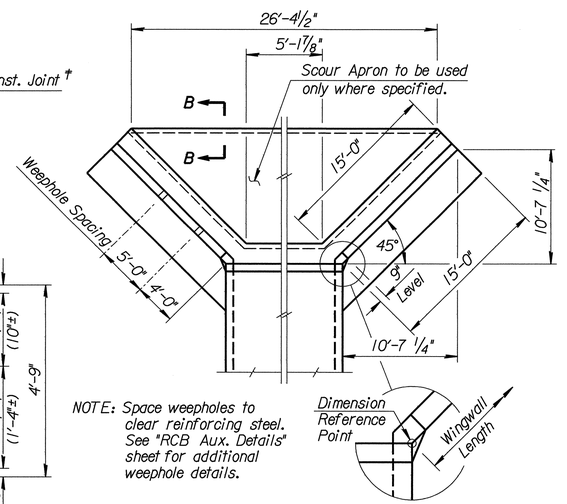

NOTE: Space weepholes to clear reinforcing steel. See "RCB Aux. Details" sheet for additional weephole details.

WING DIMENSIONS FOR NORMAL BOX

(3½:1 Embankment Slope)

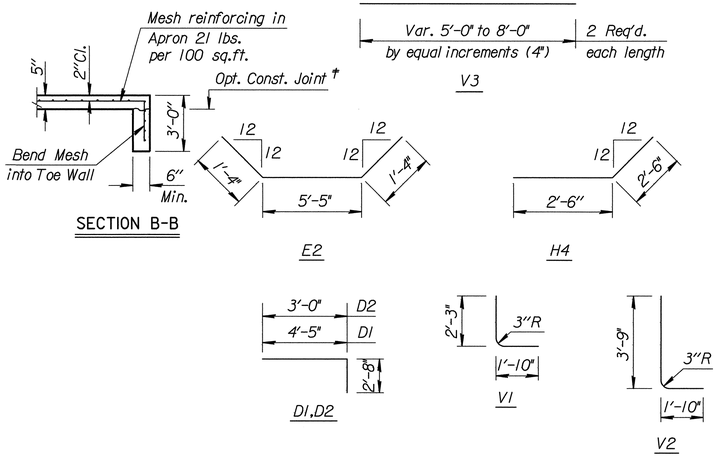

SECTION B-B

BENDING DIAGRAM

(All dimensions are out to out of bars.)

Quantities listed below are included in the Summary of Quantities shown on the RCB details.

WINGWALL QUANTITIES (One End Only)	
Class AAA Concrete:	
Wingwalls -------	11.3 CY.
Apron -------	3.8 CY.
Soil Saver -------	0.0 CY.
Reinforcing Steel	862 Lbs.
Welded Wire Fabric	52 Lbs.

NOTE: Reinforcing Bar List is for both wings at one end of box only.

✱ See Bending Diagram

	Mark	#4C1	#4D1	#4E1	#4C2	#4D2	#4E2	#4V1	#5V2	#4V3	#4H1	#4H2	#4H3	#4H4	#4H5
0° Skew	Number	8	30✱	6	1	4✱	3✱	20✱	20✱	20	8	2	2	34✱	22
	Length	18'-3"	7'-1"	14'-9"	7'-10"	5'-8"	8'-1"	4'-1"	5'-7"	✱	13'-10"	9'-6"	15'-10"	5'-0"	3'-3"

NO.	DATE	REVISIONS	BY	APP'D

KANSAS DEPARTMENT OF TRANSPORTATION

Sta. 4+32.24

FLARED WINGWALLS
7 ft Rise (0°SKEW)

Sedgwick Co.

FHWA APPROVAL	6-5-91	APP'D	KENNETH F. HURST
DESIGNED	DETAILED	QUANTITIES	TRACED
DESIGN CK.	DETAIL CK.	QUAN.CK.	TRACE CK.

Sheet No. 16

Plotted By: $$USERNAME$$ | Plot Location: $UNIT$
File: $$$$$$$$$$$$$DGNSPEC$$$$$$$$$$$$$$$$$$$$
Plot Date: $$$$$$SYTIME$$$$$$$$$$$$$$$$$$$