STATE	PROJECT NO.	YEAR	SHEET NO.	TOTAL SHEETS
KANSAS	87 N-0239-01	2004	20	47

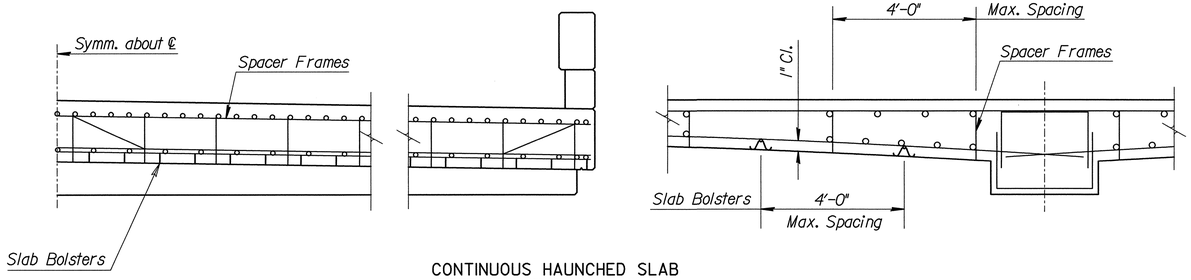

CONTINUOUS HAUNCHED SLAB

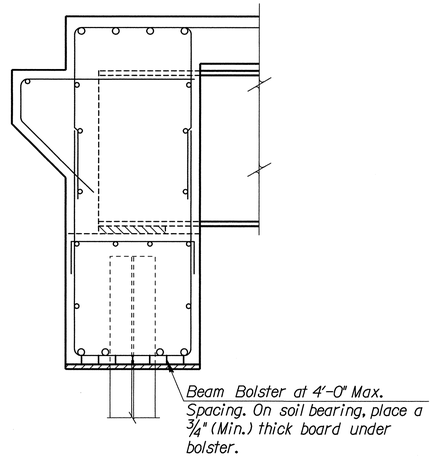

ABUTMENT

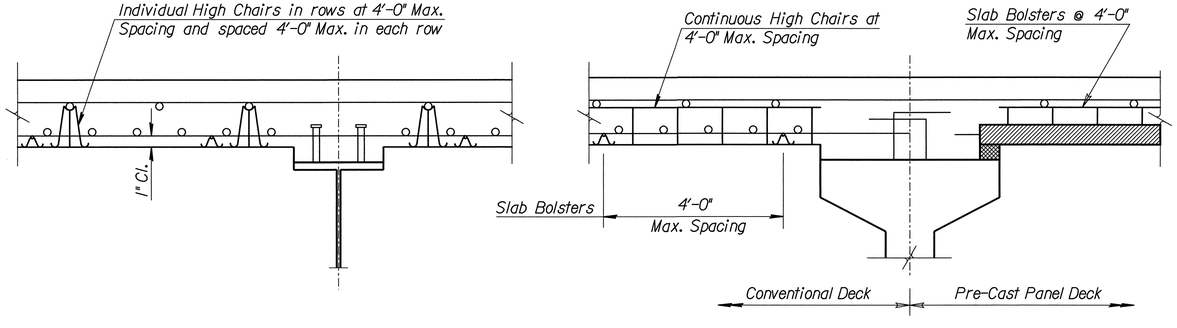

DECK GIRDERS

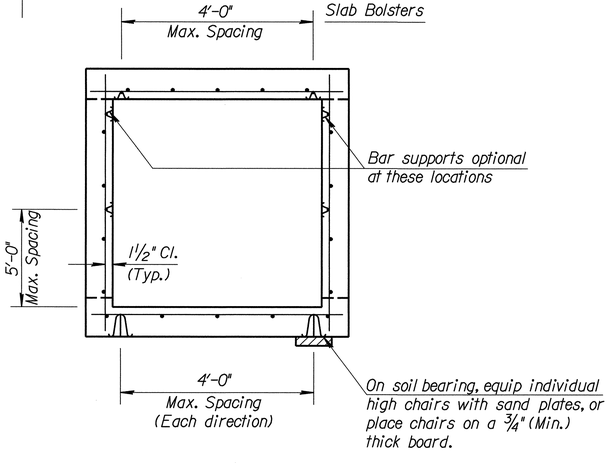

BOX CULVERT

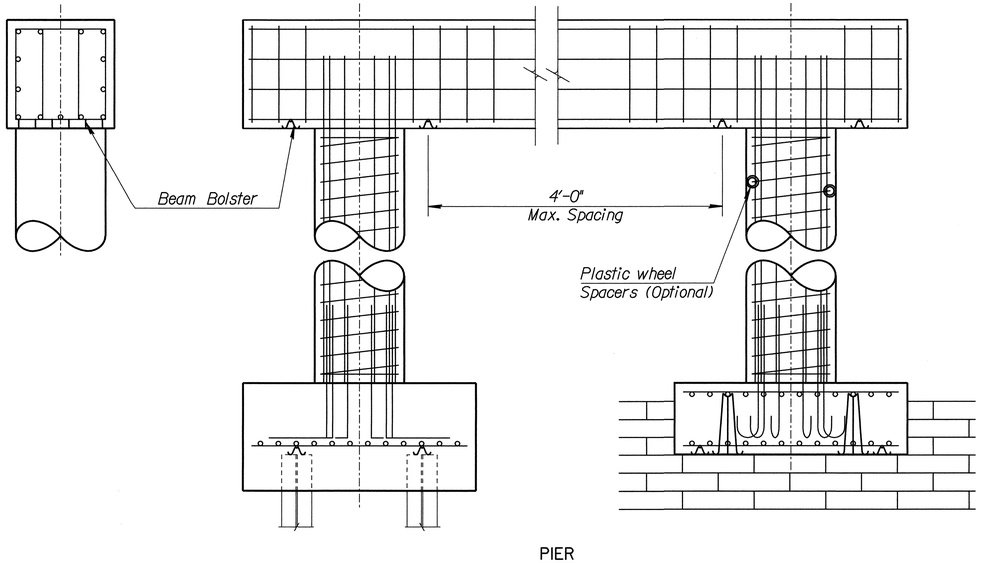

PIER

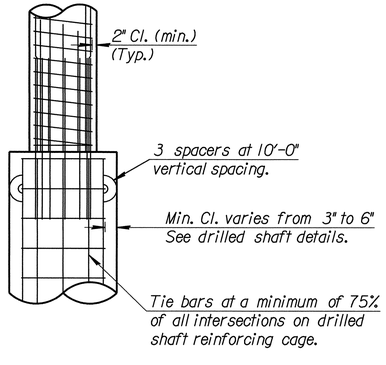

DRILLED SHAFT

TYPICAL SECTION

Reference is made to the latest edition of the CRSI "Manual of Standard Practice" for recommended industry practices concerning reinforcing steel.

Use only the following types of bar supports:

1) Wire Bar Supports:

a) Epoxy coated reinforcing: Class 1 Protection
b) Non-epoxy coated reinforcing: Class 1, 2, or 3 Protection

2) Plastic Bar Supports

3) Supplementary bars

When securing epoxy coated reinforcement, use tie wires or metal clips that are epoxy or plastic coated.

Do not weld reinforcing steel to bar supports or to other reinforcing steel. Shop weld spacer frames for haunched slabs.

Tie bars at all intersections around the perimeter of each mat and at not less than 2'-0" centers or at every intersection, whichever is greater.

Where more than one length of bar support is required, lap the end legs so they are locked or tied together.

Use proper height supports to maintain the distance between the reinforcing and the formed surface or the top surface of deck slabs within 1/4" of that indicated on the plans.

Spacings shown are maximums. Use sufficient supports, as determined by the Engineer, to retain the reinforcing steel in position.

Construct any platforms, required for the support of workers and/or equipment during concrete placement, directly on the forms and not on the reinforcing steel.

Designs and arrangements of Supports or Spacers other than as shown on this sheet, may be used with the permission of the Engineer.

NO.	DATE	REVISIONS	BY	APP'D
3	8-21-00	Added Pre-Cast Panel Detail	RAM	KFH
2	12-20-99	Added Haunched Slab Bolsters	RAM	KFH
1	12-09-99	Revised Drilled Shaft Clearance	RAM	KFH

KANSAS DEPARTMENT OF TRANSPORTATION

SUPPORTS AND SPACERS FOR REINFORCING STEEL

BRI20

FHWA APPROVAL		9-05-00	APP'D		KENNETH F. HURST		
DESIGNED	RAM	DETAILED	GFK	QUANTITIES		CADD	GFK
DESIGN CK.	LRR	DETAIL CK.	RAM	QUAN. CK.		CADD CK.	RAM

Std. Base File: br120.dgn
Plotted By: $$USERNAME$$ | Plot Location: $UNIT$
File: $$$$$$$$$$$$$$DGNSPEC$$$$$$$$$$$$$$
Plot Date: $$$$$$$$$$$$$$$