E.F. INDICATES EACH FACE.
N.F. INDICATES NEAR FACE.
F.F. INDICATES FAR FACE.

STATE	PROJECT NO.	YEAR	SHEET NO.	TOTAL SHEETS
KANSAS	54–87 K–8258–02	2003	26	76

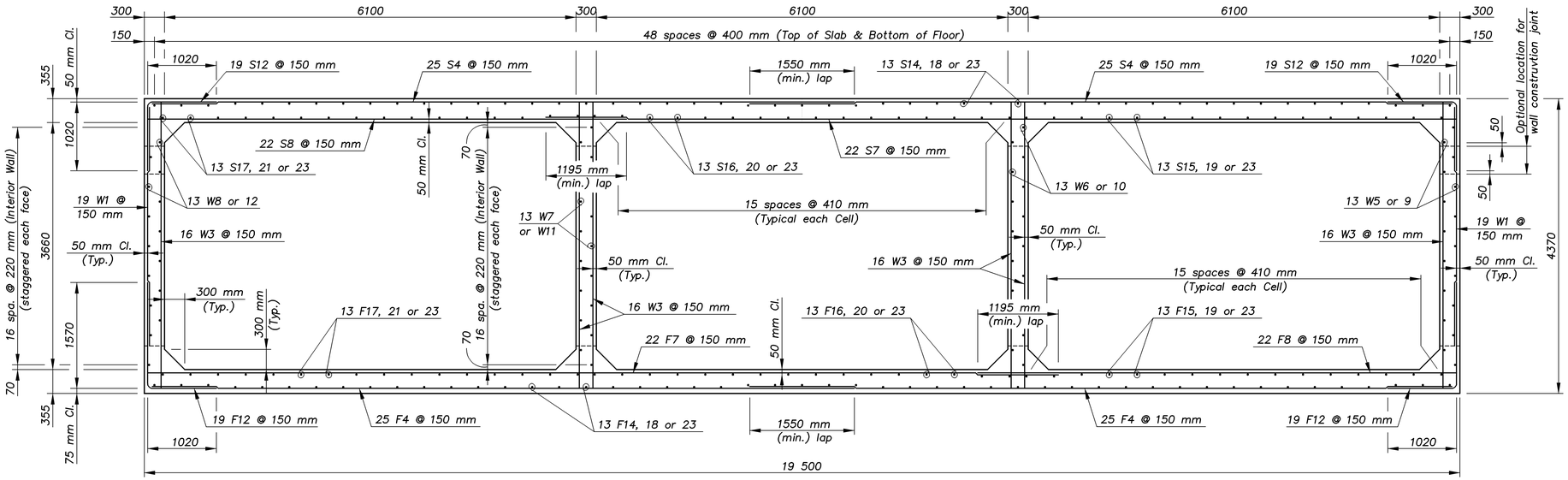

SECTION D–D

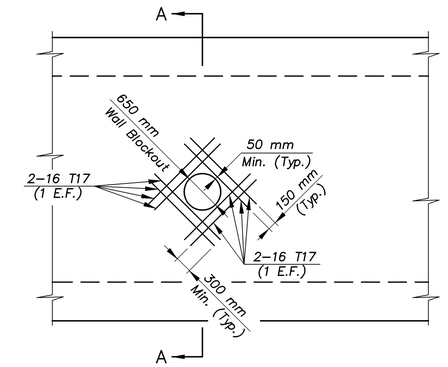

ELEVATION VIEW OF 650 mm BLOCKOUT

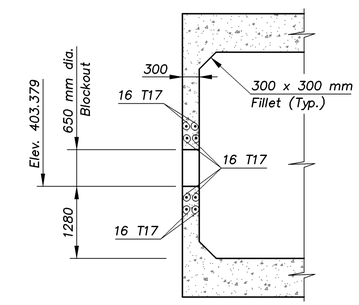

SECTION A–A

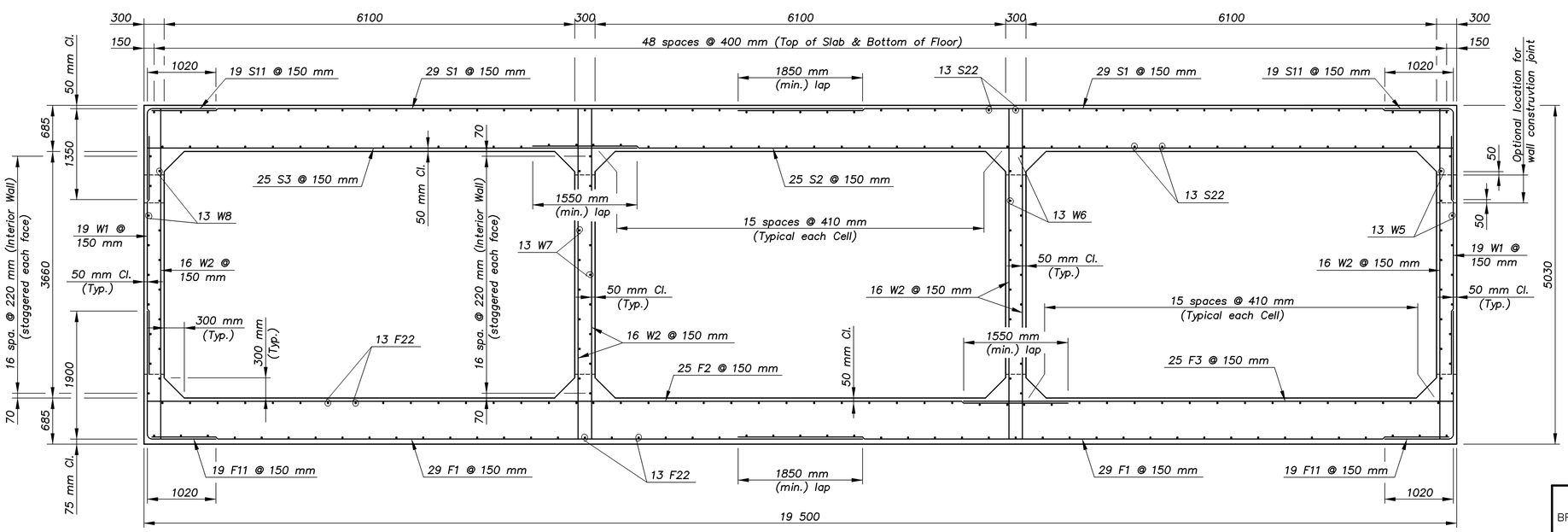

SECTION E–E

1:250

J:\01026B\GYPSUM\DETAILS

KANSAS DEPARTMENT OF TRANSPORTATION

BR. NO. 54–87–31.63(706) STA. 4+689.738

TRIPLE 6.1 x 3.7 m R.C.B.
TYPICAL SECTIONS (Part "A")

Proj. No. 54–87 K–8258–02 SEDGWICK COUNTY

Cook, Flatt & Strobel
ENGINEERS, P.A.

DESIGNED	R.S.C.	SCALE	Varies
DETAILED	T.R.G.	DATE	
QUANTITIES	T.R.G.	SHEET	5 OF 13