FHWA REGION NO.	STATE	PROJECT NO.	FISCAL YEAR	SHEET NO.	TOTA SHEET
7	KANSAS	87 N-0226-01	2006	68	118

SERVICE BOX CONSTRUCTION/INSTALLATION DETAILS

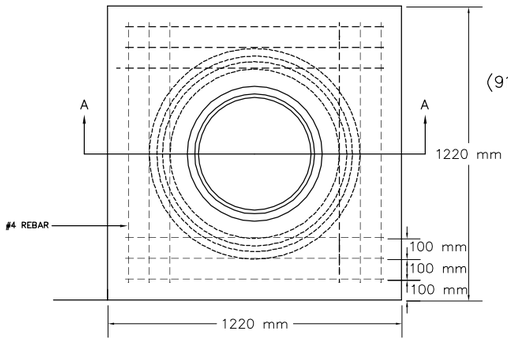

PRE-CAST CONCRETE SERVICE BOX

(915 mm I.D. X 1372 mm RCP) with 152 mm CAP

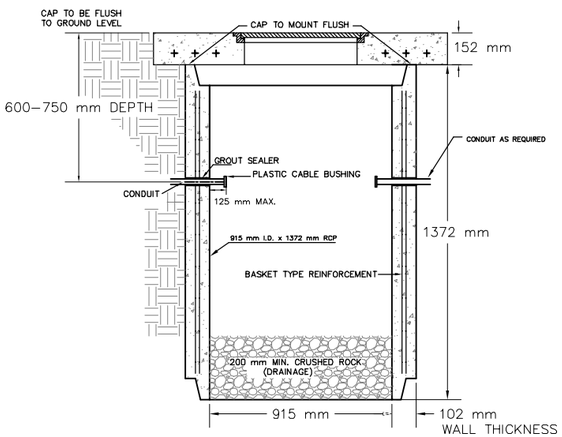

SECTION A–A

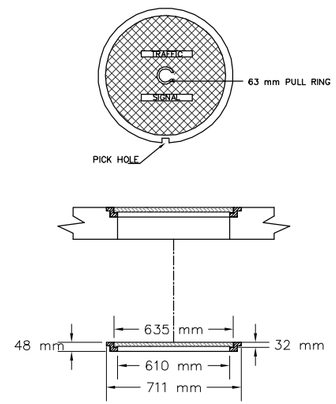

RING & COVER DETAIL

CONDUIT/DETECTOR WIRE INSTALLATION DETAILS

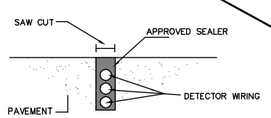

STD. CURB & GUTTER

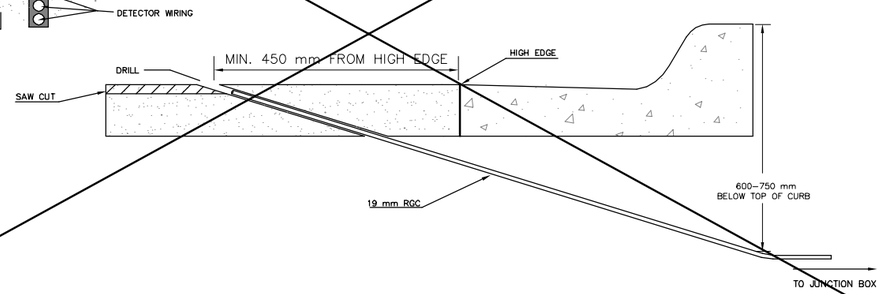

170 CONTROLLER PAD DETAILS

REBAR SHALL BE ASTM A615M GRADE 300 MEETING THE REQUIREMENTS OF SUBSECTION SPECIFICATIONS.

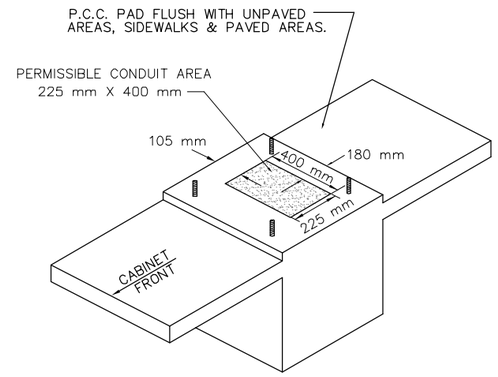

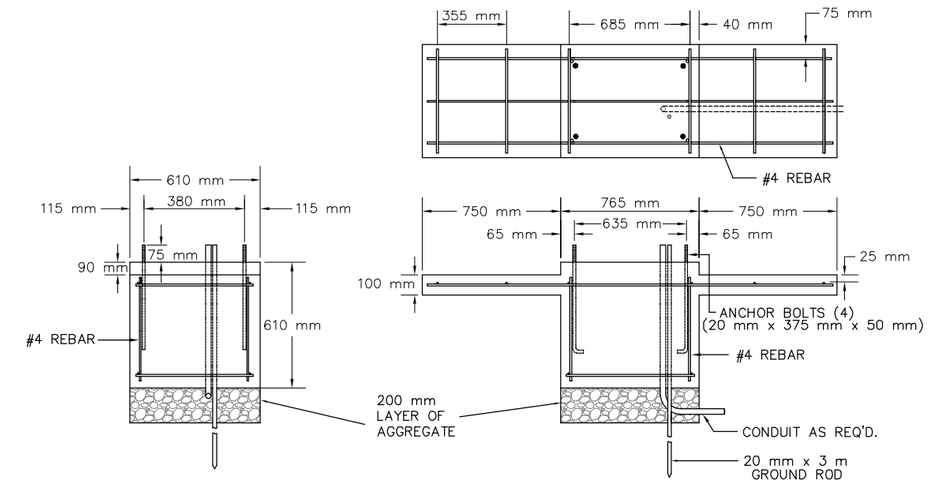

JUNCTION BOX DETAILS

PRE-FAB Junction Box
(610 mm I.D. X 915 mm R.C.P.)

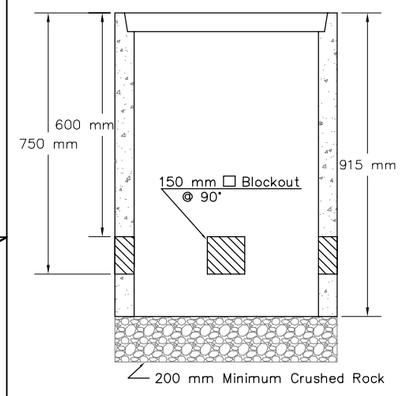

SECTION A–A

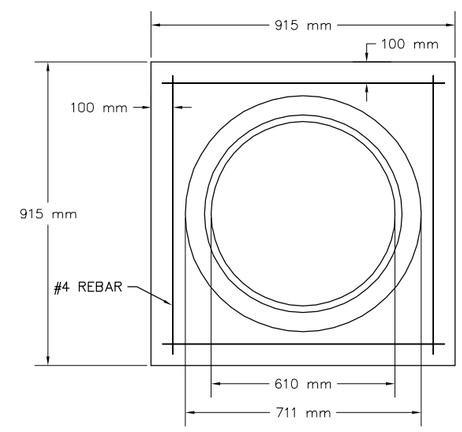

JUNCTION BOX CAP

915 mm x 915 mm x 152 mm TOP OF CAP TO BE FLUSH WITH GROUND LEVEL.

** SEE SERVICE BOX INSTALLATION FOR RING & COVER DETAILS.

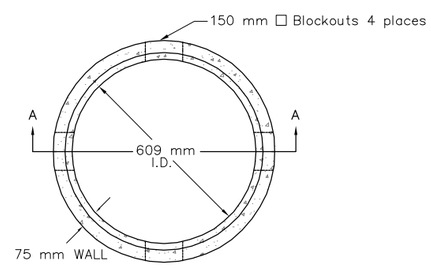

NOTES:

SERVICE & JUNCTION BOX:

1. CONDUIT CONNECTION TO BE FLUSH TO WITHIN 125 mm OF INSIDE FACE OF SIDE WALL, CONDUIT TO DRAIN INTO SERVICE BOX.
2. CONDUIT CONNECTIONS TO SERVICE BOX SHALL BE TERMINATED WITH PLASTIC CABLE BUSHING.
3. CONDUIT SHALL BE SEALED WITH APPROVED SEALER AT INSIDE WALL FACE.
4. ALL SERVICE & JUNCTION BOXES TO HAVE 200 mm OF CRUSHED ROCK.

TRENCHING:

1. DEPTH TO BE 750 mm MINIMUM WITH ROCK & STUBBLE FREE BACKFILL TO SERVE AS BEDDING MATERIAL. MAINTAIN MINIMUM CONDUIT DEPTH IN TRENCH.
2. BACKFILL TO BE COMPACTED IN 150 mm LOOSE LIFTS BY HAND OR MECHANICAL TAMPING TO A 95% STANDARD DENSITY.

CONDUIT:

1. SLOPE CONDUIT TO DRAIN AS DIRECTED BY THE ENGINEER.
2. 75 mm RIGID STEEL CONDUIT BTWN. SERVICE BOXES.
   32 mm " " " BTWN. SERVICE & JUNCTION BOXES.
   19 mm " " " BTWN. JUNCTION BOXES.
   19 mm " " " BTWN. JUNCTION BOX & DETECTOR LOOP SAW CUT

REV. DATE	COMMENTS	INT

PROJECT NUMBER	SHEET NAME	ENGINEERING DIRECTORY
472-83862	SB1-M	F:\\Hillside\Traffic

DESIGN	DRAWN	APPROVED	DATE	SCALE	BAUGHMAN NO
Staff	Staff	Staff	May 2006	None	01-03-E947

CAPITAL IMPROVEMENT PROJECT

SERVICE BOX AND CONTROLLER PAD DETAILS

HILLSIDE AVENUE - KELLOGG TO 3RD STREET NORTH

BAUGHMAN COMPANY, P.A.
ENGINEERING, SURVEYING, & PLANNING
316-262-7271 * 315 ELLIS * WICHITA, KANSAS 67211

SHEET 68 OF 118