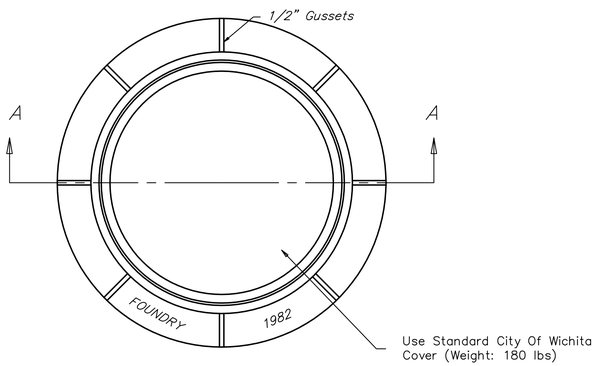

TOP VIEW

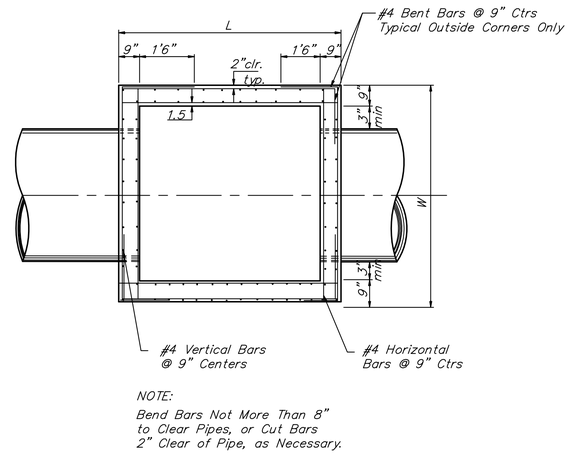

NOTE:
Bend Bars Not More Than 8"
to Clear Pipes, or Cut Bars
2" Clear of Pipe, as Necessary.

SECTION B–B

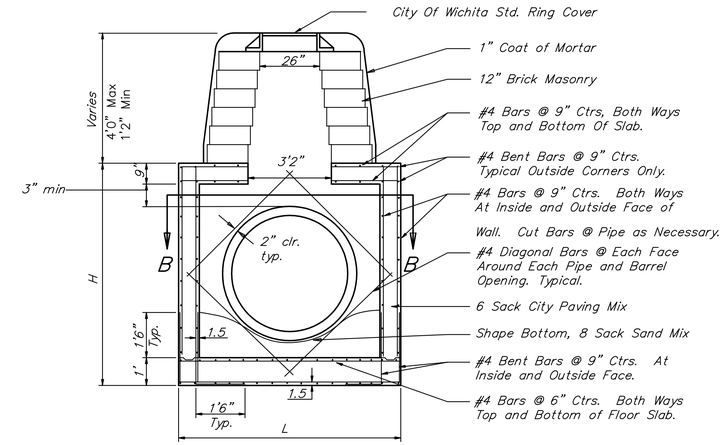

REINFORCED CONCRETE MANHOLE
STACK 2.33' TO 4'0"

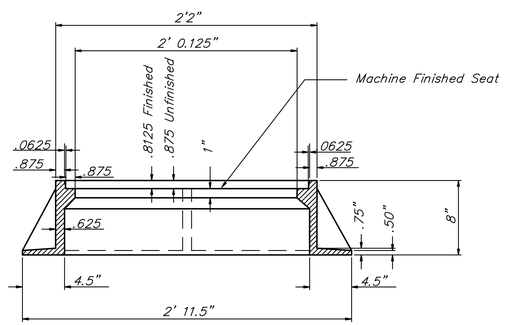

SECTION A–A

MANHOLE FRAME
Weight: 240 Lbs.

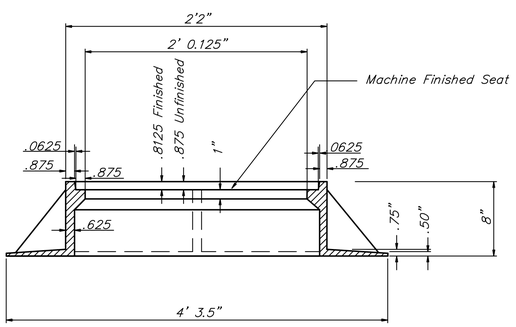

WIDE FLANGE RING
Weight: 705 Lbs.

GENERAL NOTES:

1. MORTAR USED IN MASONRY CONSTRUCTION SHALL CONTAIN 8 SACKS OF CEMENT PER CUBIC YARD. CONCRETE USED IN MANHOLE WALLS AND BASES SHALL CONFORM TO THE REQUIREMENTS FOR CONCRETE PAVEMENT CONSTRUCTION AS SPECIFIED IN THE CITY STANDARD PAVING SPECIFICATIONS, USING CITY CONCRETE PAVEMENT MIX WITHOUT AIR ENTRAINING ADMIXTURE. MORTAR SHALL BE PLACED AROUND THE MANHOLE RING AS SHOWN ON THE DRAWINGS WHEN MANHOLES ARE CONSTRUCTED IN UNPAVED AREAS. COMPLETED MANHOLE SHALL BE WITHOUT LEAKS AND WATER TIGHT.

2. THE FLOORS OF ALL MANHOLES SHALL BE SHAPED WITH FLOW CHANNELS SUCH THAT THE MANHOLES WILL BE SELF CLEANING. USING 8–SACK SAND MIX CONCRETE. FLOW CHANNELS SHALL BE FORMED TO MATCH THE BOTTOM HALVES OF THE INFLOWING PIPES AND THE OUTFLOWING PIPE. MANHOLE FLOORS SHALL HAVE SLOPES OF 3 INCHES PER FOOT IN THE AREAS OUTSIDE OF THE FLOW CHANNELS SLOPED TOWARD THE FLOW CHANNELS.

3. MANHOLE COVER CASTINGS AND MANHOLE FRAME CASTINGS SHALL CONFORM TO THE RE–QUIREMENTS AS INDICATED IN THE STANDARD SPECIFICATIONS AND AS SHOWN IN THE STANDARD DETAIL DRAWING.

4. THE ENDS OF ALL PIPES IN MANHOLES SHALL BE CUT OFF FLUSH WITH THE INSIDE FACE OF MANHOLE WALL.

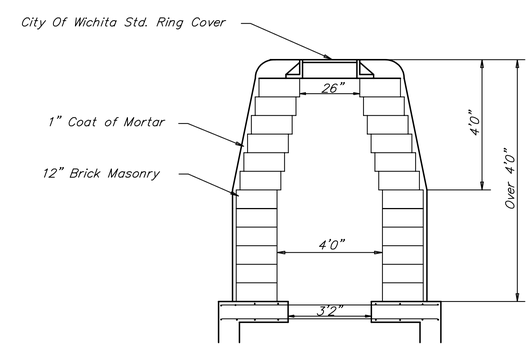

MANHOLE STACK OVER 4'0"

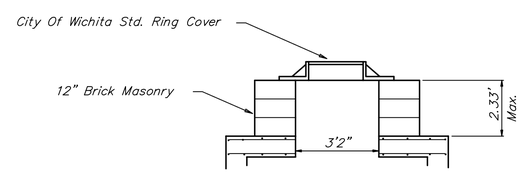

MANHOLE STACK LESS THAN 2.33'

THE CITY OF WICHITA

CITY ENGINEER'S OFFICE
CITY HALL – SEVENTH FLOOR
455 NORTH MAIN STREET
WICHITA, KANSAS 67202
(316) 268–4501
(316) 268–4114 FAX

REINFORCED CONCRETE MANHOLE

JAMES L. ARMOUR, P.E. – CITY ENGINEER

PROJECT NUMBER	OCA NO.
468–84167	751422
DATE MAR 96	SHEET 8A OF 47

Saved 05-26-2006 11:16:18 AM by DAR
Plot Scale 1:1 05-26-2006 1:12:49 PM by DAR
\\CITYWI\Data\Stds\Wpd\2006-05-26 Inc Dsp\DWG\08A-RCMH01.C