STATE	PROJECT NO.	YEAR	SHEET NO.	TOTAL SHEETS
KANSAS	54–87 K–8258–08	2005	26	223

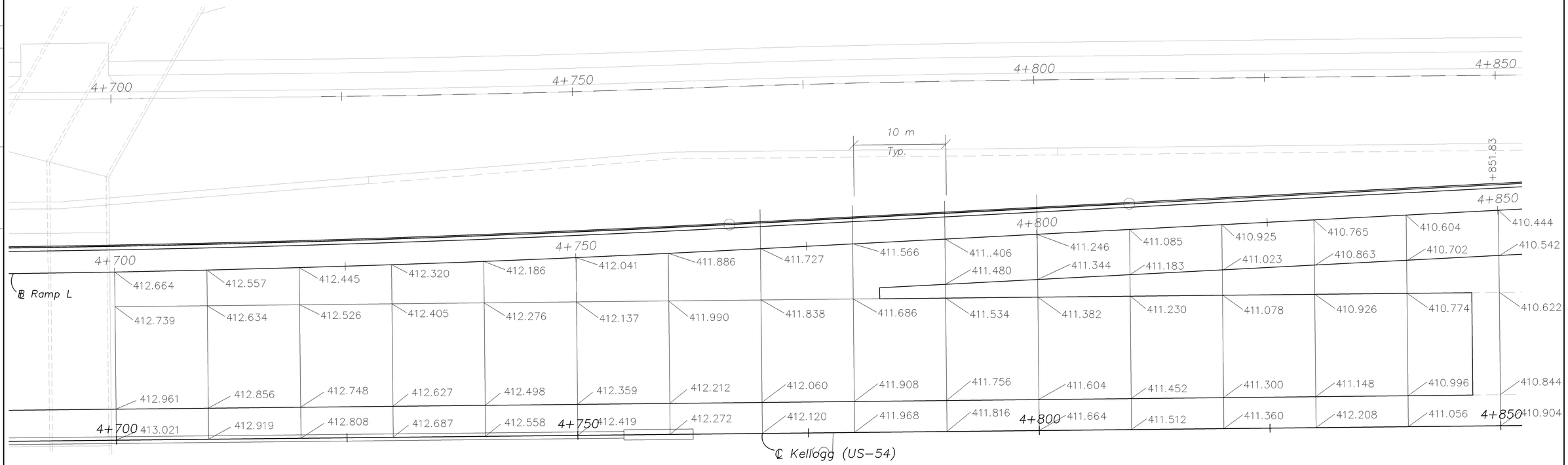

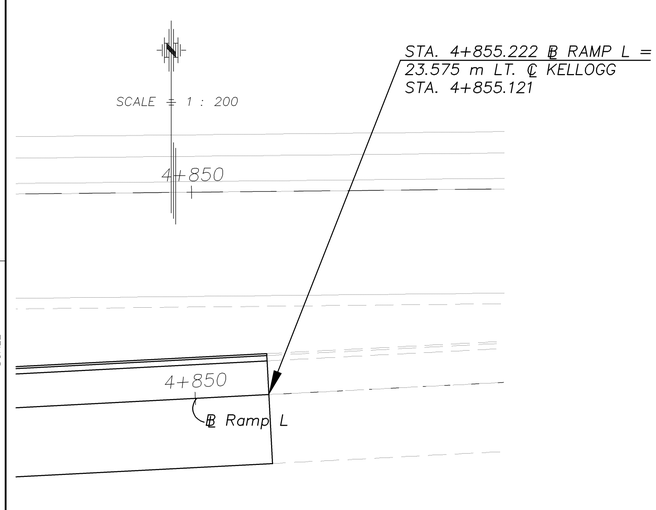

DATE	BY
REFERENCE NOTED	
REFERENCE CHECKED	

Drawn by:
Plotted:
File:
SCALE

CFS Cook, Flatt & Strobel ENGINEERS, P.A.

KANSAS DEPARTMENT OF TRANSPORTATION

PAVING DETAILS
NORTH FRONTAGE ROAD
RAMP L