STATE	PROJECT NO.	YEAR	SHEET NO.	TOTAL SHEETS
KANSAS	54–87 K–8258–08	2005	98	223

** 1470 mm lap (min.) 25 PB1 & PB2 Bars
1040 mm lap (min.) 25 PB3 & PB4 Bars
640 mm lap (min.) 19 PB5 Bars

E.F. INDICATES EACH FACE.
N.F. INDICATES NEAR FACE.
F.F. INDICATES FAR FACE.

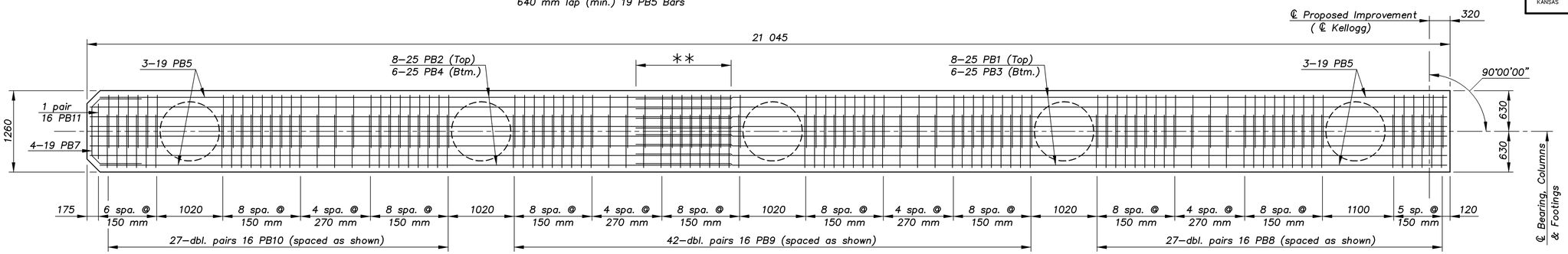

PLAN VIEW OF PIER BEAM REINFORCEMENT

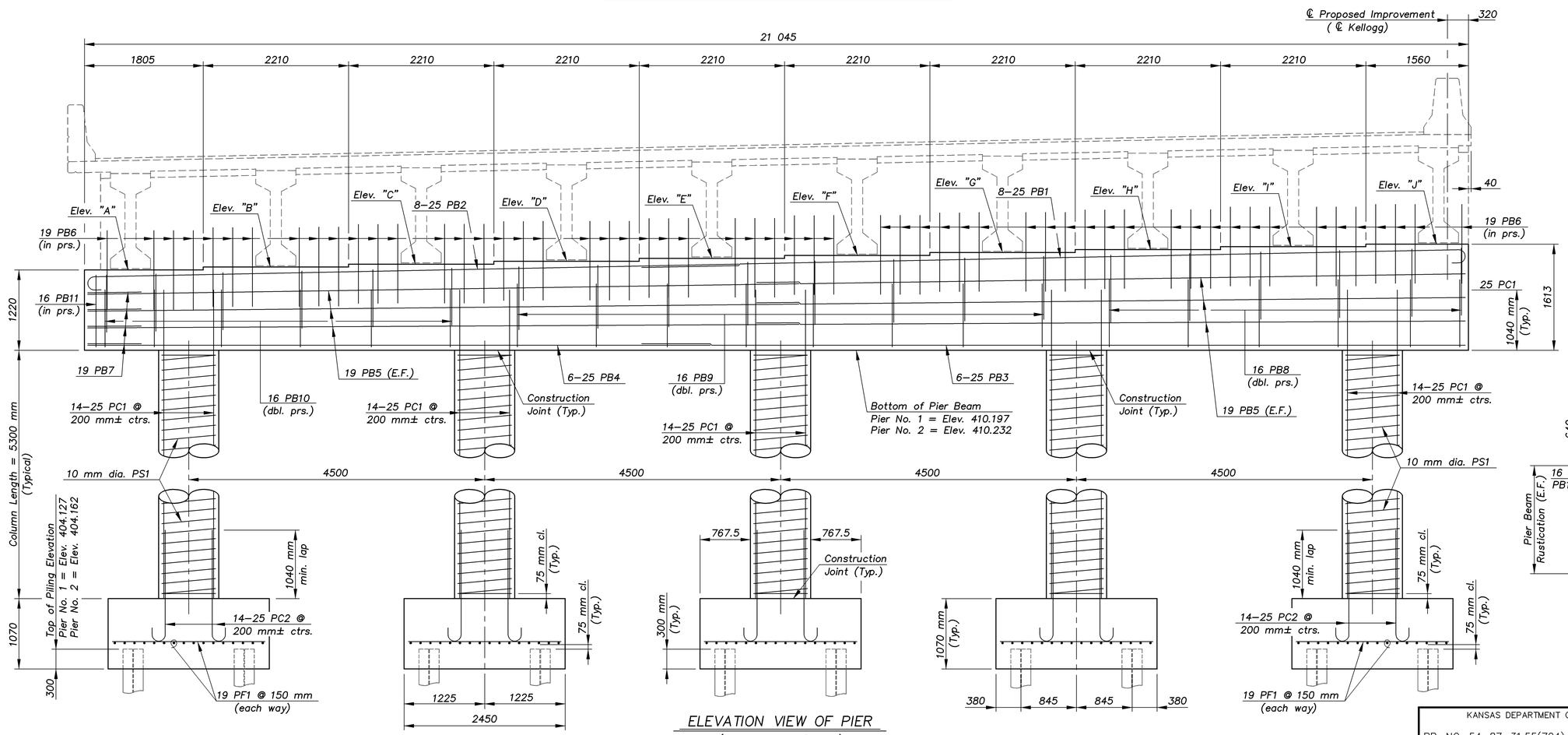

ELEVATION VIEW OF PIER
(Looking Ahead Station)

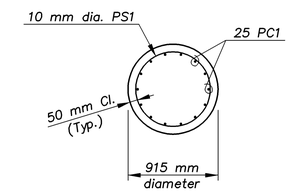

SECTION THRU COLUMN
(TYPICAL)

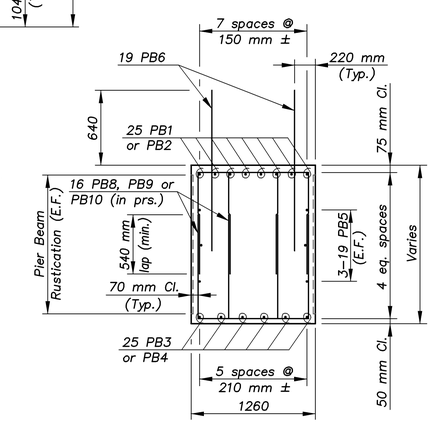

SECTION THRU BEAM
(TYPICAL)

TOP OF MASONRY ELEVATIONS

Location	Elev. "A"	Elev. "B"	Elev. "C"	Elev. "D"	Elev. "E"	Elev. "F"	Elev. "G"	Elev. "H"	Elev. "I"	Elev. "J"
Pier No. 1	411.417	411.461	411.505	411.549	411.594	411.638	411.682	411.726	411.770	411.810
Pier No. 2	411.452	411.496	411.540	411.584	411.629	411.673	411.717	411.761	411.805	411.845

1:100

EASTERN/PIER

KANSAS DEPARTMENT OF TRANSPORTATION

BR. NO. 54–87–31.55(704) W.B. STA. 4+575.138

PIER DETAILS

KELLOGG AVENUE OVER EASTERN

Proj. No. 54–87 K–8258–08 SEDGWICK COUNTY

CFS
Cook, Flatt & Strobel
ENGINEERS, P.A.

DESIGNED	R.S.C.	SCALE	Varies
DETAILED	T.R.G.	DATE	
QUANTITIES	T.R.G.	SHEET	20 OF 47