STATE	PROJECT NO.	YEAR	SHEET NO.	TOTAL SHEETS
KANSAS	54–87 K–8258–08	2005	100	223

** 1470 mm lap (min.) 25 PB1 & PB2 Bars
1040 mm lap (min.) 25 PB3 & PB4 Bars
640 mm lap (min.) 19 PB5 Bars

E.F. INDICATES EACH FACE.
N.F. INDICATES NEAR FACE.
F.F. INDICATES FAR FACE.

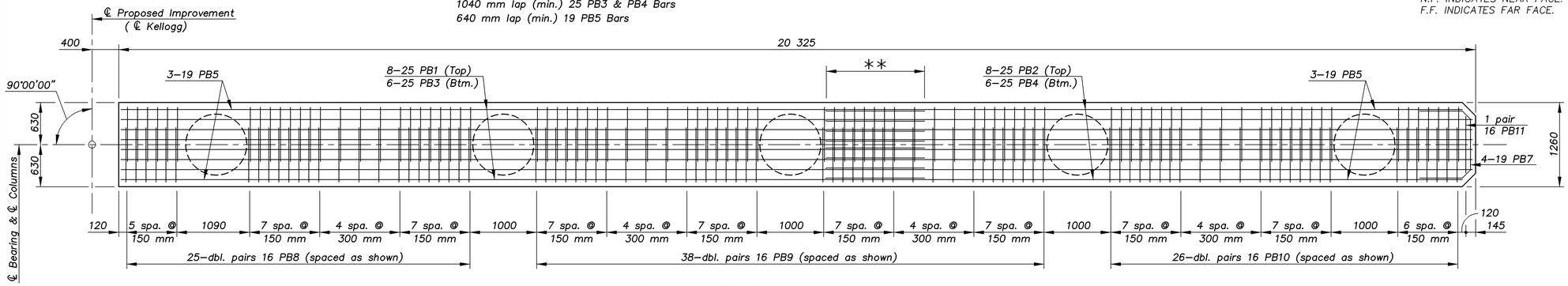

PLAN VIEW OF PIER BEAM REINFORCEMENT

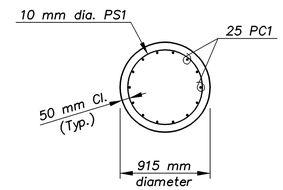

SECTION THRU COLUMN
(TYPICAL)

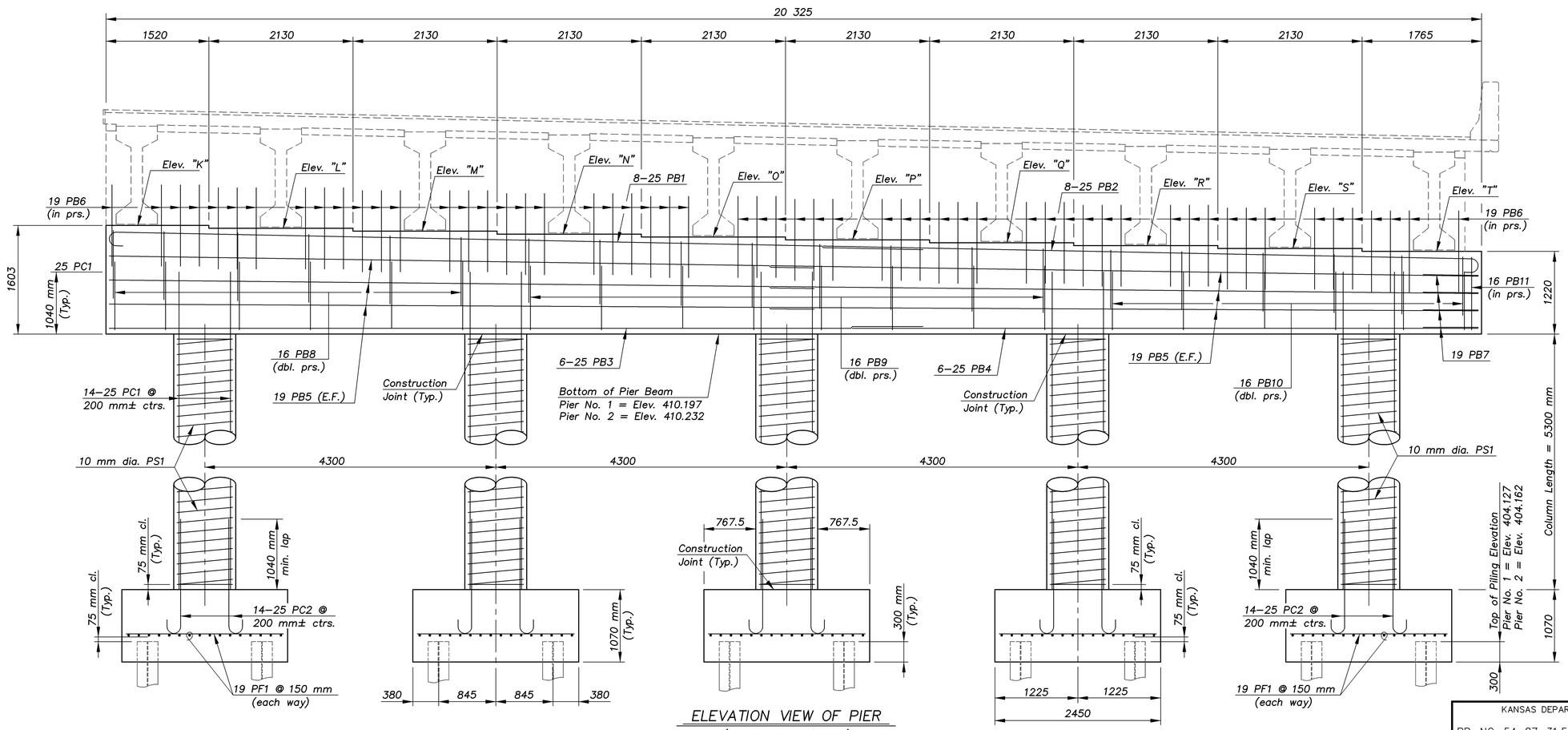

ELEVATION VIEW OF PIER
(Looking Ahead Station)

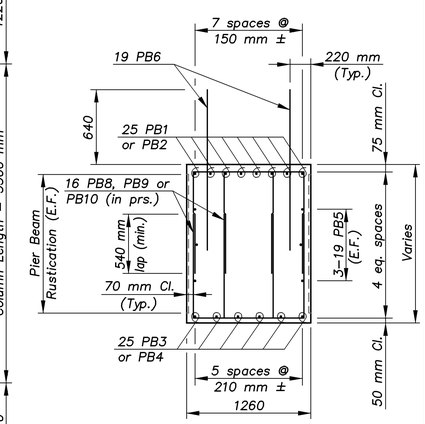

SECTION THRU BEAM
(TYPICAL)

TOP OF MASONRY ELEVATIONS

Location	Elev. "K"	Elev. "L"	Elev. "M"	Elev. "N"	Elev. "O"	Elev. "P"	Elev. "Q"	Elev. "R"	Elev. "S"	Elev. "T"
Pier No. 1	411.800	411.758	411.715	411.672	411.630	411.587	411.545	411.502	411.459	411.417
Pier No. 2	411.835	411.793	411.750	411.707	411.665	411.622	411.580	411.537	411.494	411.452

1:100

EASTERN/PIER

KANSAS DEPARTMENT OF TRANSPORTATION

BR. NO. 54–87–31.56(705) E.B. STA. 4+575.138

PIER DETAILS

KELLOGG AVENUE OVER EASTERN

Proj. No. 54–87 K–8258–08 SEDGWICK COUNTY

CFS
Cook, Flatt & Strobel
ENGINEERS, P.A.

DESIGNED	R.S.C.	SCALE	Varies
DETAILED	T.R.G.	DATE	
QUANTITIES	T.R.G.	SHEET	22 OF 47