STATE	PROJECT NO.	YEAR	SHEET NO.	TOTAL SHEETS
KANSAS	54-87 K-8258-01	2005	178	223

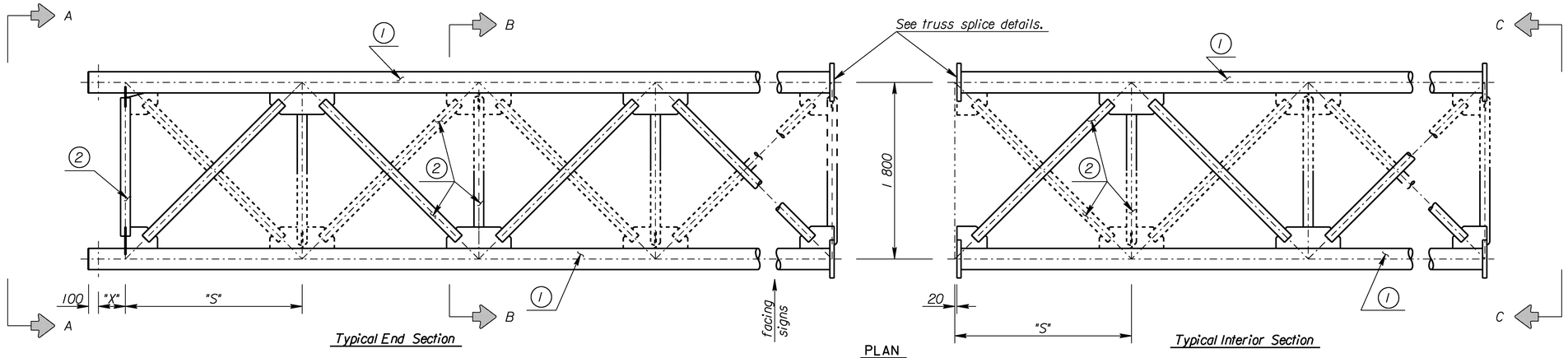

Typical End Section

PLAN

Typical Interior Section

Note: Dashed lines, in plan and elevation views, represent the bottom or rear portions of member (2).

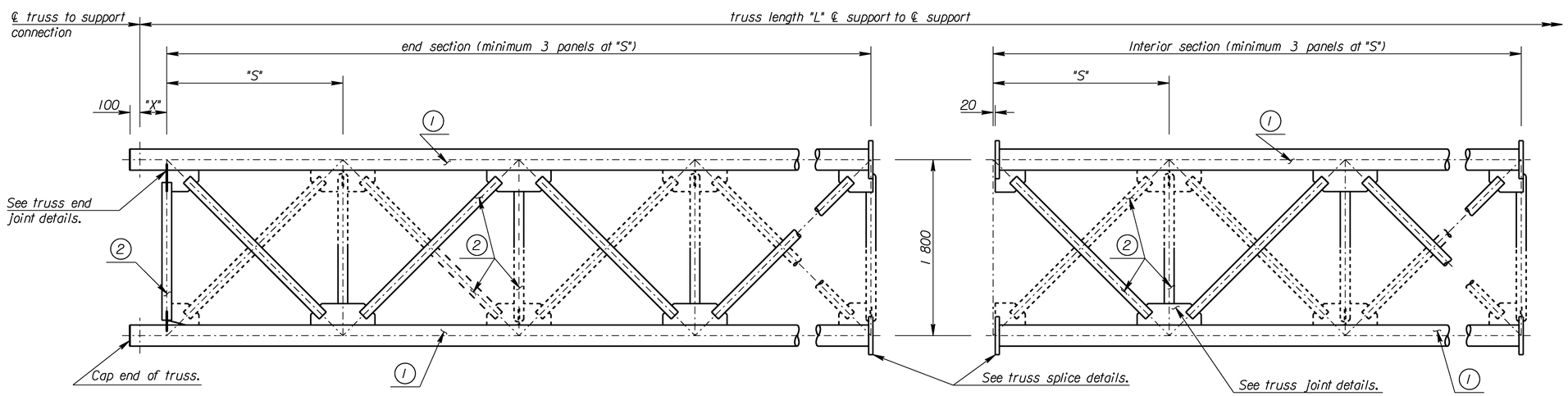

Typical End Section
(left end shown)

ELEVATION

Typical Interior Section

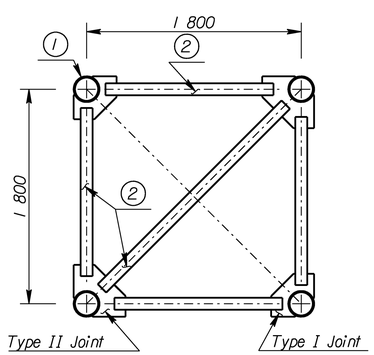

SECTION A-A
See truss end joint details.

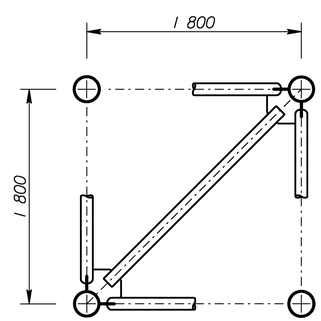

SECTION B-B
See truss Joint details.

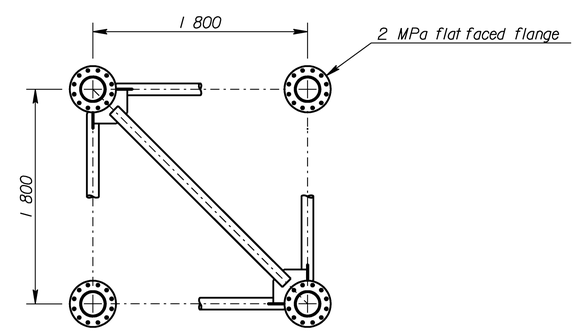

SECTION C-C
See truss splice details.

Note: See "Construction Layout" for wall thickness, "N","S","L" and "X" dimensions.

Member (1) is 219 mm O.D. pipe.

Member (2) is 102 mm O.D. pipe.

NO.	DATE	REVISIONS	BY	APP'D

KANSAS DEPARTMENT OF TRANSPORTATION

STANDARD STRUCTURAL SIGN SUPPORTS
SPAN TYPE OVERHEAD
ALUMINUM ALTERNATE
TRUSS FRAMING PLAN AND DETAILS

SL151B-03 SI — SEDGWICK CO.

FHWA APPROVAL			4-10-97	APP'D		Kenneth F. Hurst	
DESIGNED	BFM	DETAILED	DDP	QUANTITIES		CADD	DJE
DESIGN CK.	RDH	DETAIL CK.	RDH	QUAN.CK.		CADD CK.	LES

Std. Base File: sl151bsi.dgn - Plot 3
Plotted By: bond | Plot Location: Bridge
File: F:\Working\K82580\SL Structures\SL-82580-151bsi.dgn
Plot Date: 6/29/2005