STATE	PROJECT NO.	YEAR	SHEET NO.	TOTAL SHEETS
KANSAS	87 N-0353-01	2005	74	162

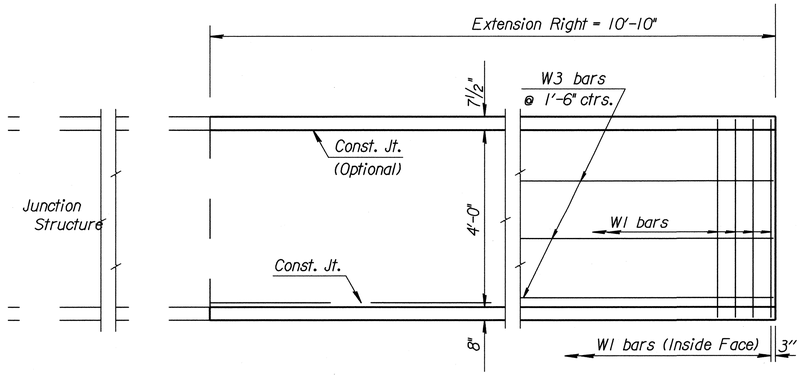

SECTION AND ELEVATION

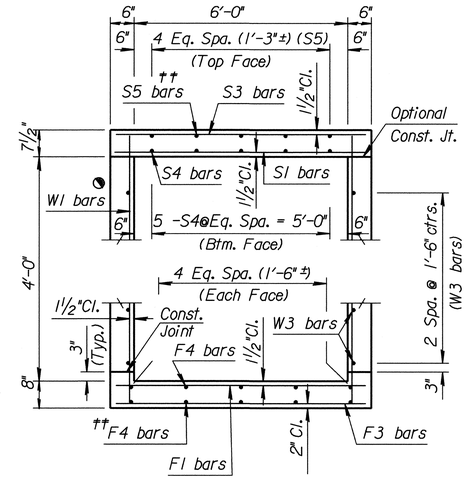

TYPICAL SECTION

◔ See RCB Auxillary Details for Optional Splice.
Note:
S3 bars omitted unless grade box or slab thickness is greater than or equal to 12".

Note:
F3 bars omitted unless floor thickness is greater than or equal to 12.".

†† Omit S5 bars when S3 bars are omitted and omit the bottom layer of F4 bars when F3 bars are omitted.

See Standard No. RD 080 for additional details.

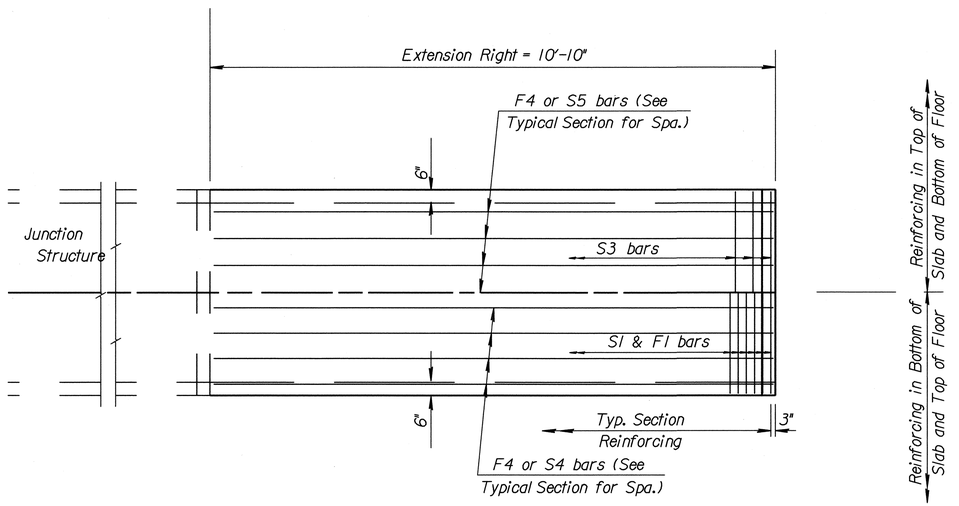

PLAN

Note: Precast Concrete Box Culverts will be allowed.
RCB to be bid by the Linear Foot. All labor, equipment and material required shall be subsidiary.

GENERAL NOTES

LOADING: HS20-44 AASHTO Specifications, 1983 Edition.
UNIT STRESSES: Grade 4.0 Concrete; f'c = 4,000 p.s.i.
Reinforcing Steel; fy = 60,000 p.s.i.
FILL HEIGHT: Unless otherwise noted, the Design Fill Height is measured from the riding surface at the culvert and shall include the surfacing.
CONCRETE: Grade 4.0 Concrete shall be used throughout. Bevel all exposed edges with a ¾inch triangular moulding. Where Grade 4.0 Concrete (AE) is specified, it shall be placed in the top slab above the Construction Joint.
REINFORCING: All reinforcing shall conform to ASTM A615, Grade 60. All dimensions relative to reinforcing steel shall be to centerline of bar unless otherwise noted.
EXCAVATION: Excavation shall not be paid for directly but shall be subsidiary to the bid item.
SEAL COURSE: A Seal Course may be required by the Engineer. The Seal Course shall be unreinforced Concrete (Commercial Grade) to a minimum depth of 3 inches or as determined by the Engineer. Concrete for the seal course shall not be paid for directly but shall be subsidiary to the bid item.
FOUNDATION STABILIZATION: Foundation Stabilization may be required as directed by the Engineer. The depth of Foundation Stabilization shall be determined by the Engineer. Foundation Stabilization shall not be paid directly but shall be subsidiary to the bid item.
QUANTITIES: The quantities shown in the Culvert Summary include apron and/or soil saver quantities when their construction is required by the plans.
GRANULAR BACKFILL (WINGWALLS): Special backfill procedures may be required at the direction of the Engineer. See Auxiliary Details Sheet.

CULVERT SUMMARY

	Flow Line Elev.	Crown Gr. Elev.	Design Fill Ht.	Skew	Wings	Scour Apron	Soil Saver	Concrete Barrel (Cu.Yds.)	Concrete Wings (Cu.Yds.)	Concrete Total (Cu.Yds.)	Reinf. Steel (Gr. 60) Barrel (Lbs.)	Reinf. Steel (Gr. 60) Wings (Lbs.)	Reinf. Steel (Gr. 60) Total (Lbs.)
Ext.Lt.	134.99	142.00	5	0	NONE	NO	NO	0.00	0.00	0.00	0	0	0
Ext.Rt.	135.10				NONE			5.29	0.00	5.29	470	0	470

BAR SCHEDULE

	F1 Size	F1 Spa.	F1 No.	F1 Length	F2 Size	F2 Spa.	F2 No.	F2 Length	F3 Size	F3 Spa.	F3 No.	F3 Length	F4 Size	F4 No.	F4 Length	S1 Size	S1 Spa.	S1 No.	S1 Length	S2 Size	S2 Spa.	S2 No.	S2 Length	S3 Size	S3 Spa.	S3 No.	S3 Length	S4 Size	S4 No.	S4 Length	S5 Size	S5 No.	S5 Length
Ext.Lt.	N/A	N/A	N/A	N/A	N/A	N/A	N/A	N/A	N/A	N/A	N/A	N/A	N/A	N/A	N/A	N/A	N/A	N/A	N/A	N/A	N/A	N/A	N/A	N/A	N/A	N/A	N/A	N/A	N/A	N/A	N/A	N/A	N/A
Ext.Rt.	5	7½"	19	6'-8"	N/A	N/A	N/A	N/A	N/A	N/A	N/A	N/A	4	5	10'-4"	5	7½"	19	6'-8"	N/A	N/A	N/A	N/A	N/A	N/A	N/A	N/A	4	5	10'-4"	N/A	N/A	N/A

	K1 Size	K1 Spa.	K1 No.	K1 Length	K2 Size	K2 Spa.	K2 No.	K2 Length	W1 Size	W1 Spa.	W1 No.	W1 Length	W2 Size	W2 Spa.	W2 No.	W2 Length	W3 Size	W3 No.	W3 Length	W4 Size	W4 Spa.	W4 No.	W4 Length	W5 Size	W5 No.	W5 Length	W6 Size	W6 No.	W6 Length	W7 Size	W7 Spa.	W7 No.	W7 Length
Ext.Lt.	N/A	N/A	N/A		N/A	N/A	N/A		N/A	N/A	N/A	N/A	N/A	N/A	N/A	N/A	N/A	N/A	N/A	N/A	N/A	N/A	N/A										
Ext.Rt.	N/A	N/A	N/A		N/A	N/A	N/A		4	9"	28	5'-0"	N/A	N/A	N/A	N/A	4	6	10'-4"	N/A	N/A	N/A	N/A										

Minimum Splice Lengths	
#4	1'-4"
#5	1'-8"
#6	2'-0"

FOR INFORMATION ONLY
SUMMARY OF QUANTITIES

Concrete (Grade 4.0)	5.3 C.Y.
Concrete (Grade 4.0)(AE)	0.0 C.Y.
Reinforcing Steel (Gr. 60)	470 Lbs.
Reinforcing Steel (Epoxy Coated)	0 Lbs.
Class III Excavation	Subsidiary
Foundation Stabilization	Subsidiary
Concrete for Seal Course	Subsidiary
Granular Backfill (Wingwalls)	Subsidiary

NO.	DATE	REVISIONS	BY	APP'D

KANSAS DEPARTMENT OF TRANSPORTATION
Sta. 34+00.00
SINGLE 6 ft x 4 ft RCB
10.6 ft EXT. RT.

Sedgwick Co.

FHWA APPROVAL	6-5-91	APP'D	KENNETH F. HURST
DESIGNED	DETAILED	QUANTITIES	TRACED
DESIGN CK.	DETAIL CK.	QUAN.CK.	TRACE CK.

Plotted By: $$USERNAME$$ | Plot Location: $UNIT$
File: $$$$$$$$$$$$$$DGNSPEC$$$$$$$$$$$$$$$$
Plot Date: $$$$$SYTIME$$$$$