| STATE | PROJECT NO. | YEAR | SHEET NO. | TOTAL SHEETS |
|---|---|---|---|---|
| KANSAS | 87 N-0353-01 | 2005 | 78 | 162 |

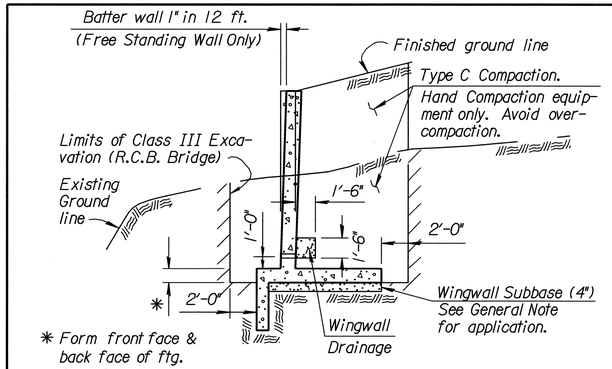


SECTION THRU WINGWALL

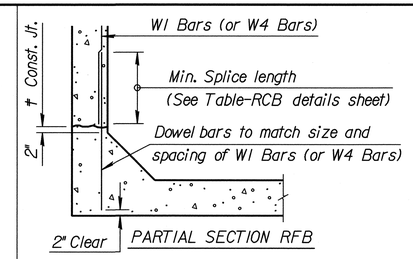


OPTIONAL BAR DETAIL

The Contractor shall have the option of using Dowel Bars to match vertical wall bars as shown, however no allowance will be made for additional steel required for bar laps.

† OPTIONAL COLD JOINT

The Contractor has the option of placing the Lower Horizontal Construction Joint at the top of the slab for RCB's or at the top of the fillet for RFB's

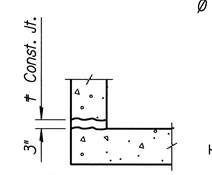


Ø Longitudinal bars shall extend through the joint to provide a minumum lap equal to the required splice length. See RCB Details Sh. for required splice length.

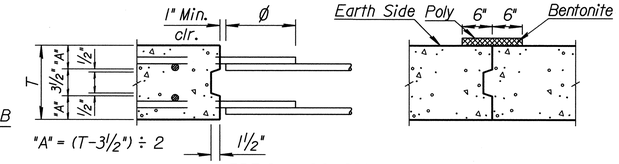


VERTICAL CONSTRUCTION JOINTS

NOTE: Vertical construction joints shall be perpendicular to the longitudinal axis of the RCB and shall be placed at any location as needed for construction and as approved by the Engineer.

NOTE: Horizontal construction joints shall be a roughened finish.

NOTE: Barrel Construction Joints located in a median with less than 5 ft. of fill or at locations specified by the Engineer, shall be protected by a bentonite based system as shown. Place the bentonite on the exterior walls and top slab. See requirements for bentonite in the KDOT Specifications for "Bridge Backwall Protection System". ~~Material and installation of the bentonite system shall be subsidiary to the bid item "Grade 4.0 Concrete".~~

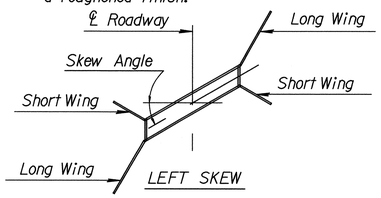


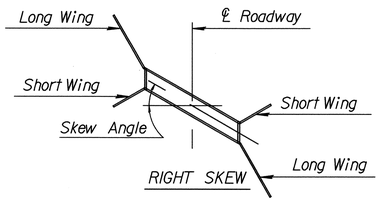


PLAN VIEW SKEWED R.C.B.

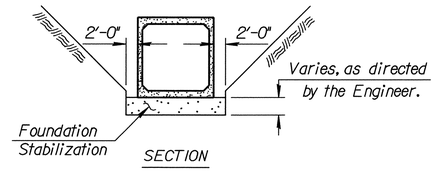


SECTION

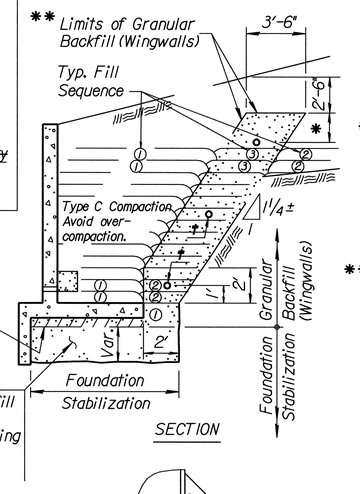


SECTION

* Omit Drain Pipe when distance is less than 2'-0".

† 4" Perforated Pipe (Install ea. 4' in Elev.)

** NOTE: As an alternative, all backfill for the wall (within 2'-6" of finish grade) may be granular backfill material. Measurement for quantity shall be to the same limits as listed in the General Notes.

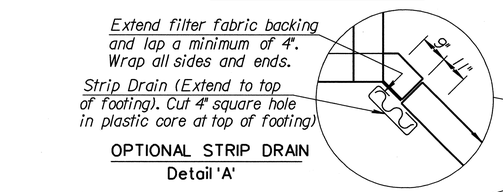


OPTIONAL STRIP DRAIN
Detail 'A'

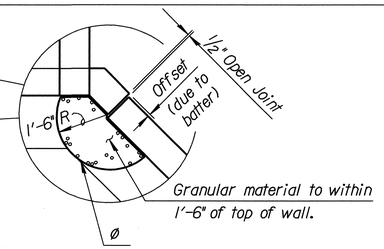


VERTICAL WINGWALL DRAINAGE FOR FREE-STANDING WINGWALLS ONLY

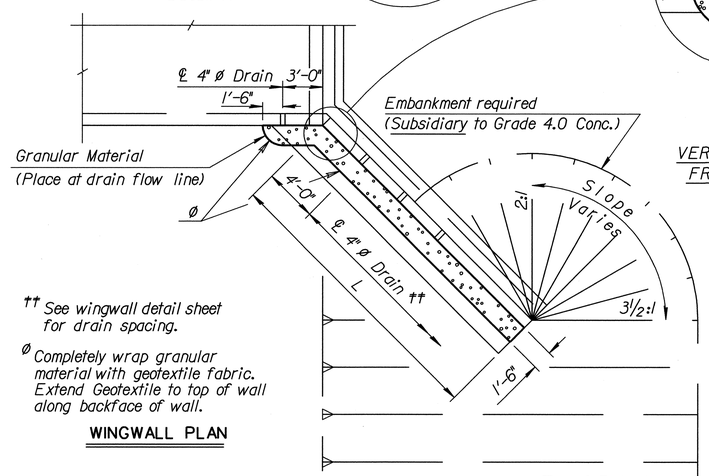


†† See wingwall detail sheet for drain spacing.

Ø Completely wrap granular material with geotextile fabric. Extend Geotextile to top of wall along backface of wall.

WINGWALL PLAN

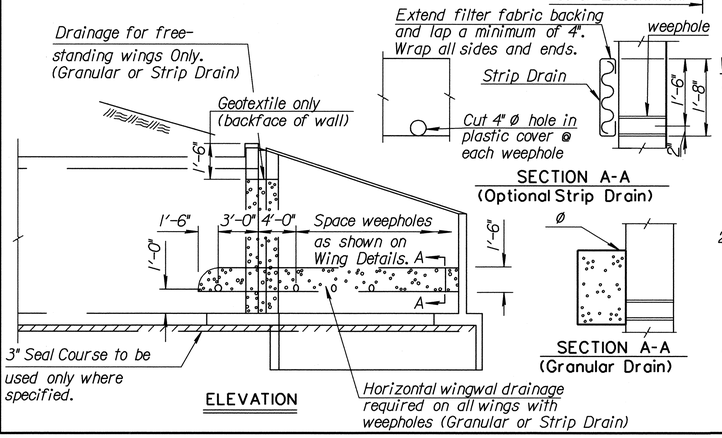


SECTION A-A
(Optional Strip Drain)

SECTION A-A
(Granular Drain)

ELEVATION

## GENERAL NOTES

Wingwall Drainage:

1. All wingwalls with weepholes shall have horizontal wingwall drainage as shown. Free-standing wingwalls shall also have the vertical wingwall drainage. Strip drains may be used in lieu of aggregate. See KDOT Specifications for "Abutment Strip Drains" for strip drain requirements.
2. ~~Construction and materials for wingwall drainage, including weepholes, geotextile fabric, granular material, and strip drain shall be subsidiary to the bid item, "Grade 4.0 Concrete".~~ Granular material for wingwall drainage shall conform to the requirements of UD-1. Weepholes may be a formed opening or corrugated polyethylene tubing.

Wingwall Subbase:

1. Wingwall subbase shall be constructed at all wingwall footings to assure the assumed coefficient of friction between the concrete footing and the foundation, with the following exceptions;

   or less in height unless otherwise determined by the Engineer.
   b) The subbase will also not be required for footings founded on rock or clean, granular material as determined by the Engineer.
2. Subbase shall consist of 4" compacted granular material consisting of commercial grade clean sand or UD-1 material. ~~All excavation, material and labor necessary to construct the wingwall subbase shall be subsidiary to "Grade 4.0 Concrete".~~

Seal Course:

1. Seal Course consisting of 3" min. of Commercial Grade Concrete shall be constructed to the limits directed by the Engineer. No reinforcing in the floor of the slab or wall footing shall be placed until the Seal Course has gained sufficient strength to permit working upon it without injury.

## GENERAL NOTES

Foundation Stabilization:

1. At sites where the wingwall footing or culvert floor is located within the limits of an existing streambed or is founded on unsuitable material, the Engineer will determine the depth of Foundation Stabilization.
2. Foundation Stabilization may be required under the box and/or wingwalls as directed by the Engineer. ~~The granular material placed for foundation stabilization shall be measured and paid for at the contract price per cubic yard for "Foundation Stabilization".~~ Material for Foundation Stabilization shall be suitable backfill material as approved by the Engineer. ~~The excavation for the placement of granular material shall be subsidiary to the bid item, "Foundation Stabilization".~~

Granular Backfill (Wingwalls):

1. In locations where the material behind the wingwall consist of soils judged as high plasticity clays, fat clays, expansive clays or organic clays, Granular Backfill (Wingwalls) shall be used. Granular Backfill construction may be used separately or combined with Foundation Stabilization as directed by the Engineer.
2. ~~Measurement for the bid item, "Granular Backfill (Wingwalls)", shall be measured in Cubic Yards to the theoretical limits as shown. Drainage pipe, rodent screens, and excavation shall be subsidiary to the bid item, "Granular Backfill (Wingwalls)".~~
3. Material for Granular Backfill (Wingwalls) shall conform to the requirements of UD-1 or BD-1. Drainage Pipe shall be corrugated polyethylene tubing conforming to KDOT Specifications.

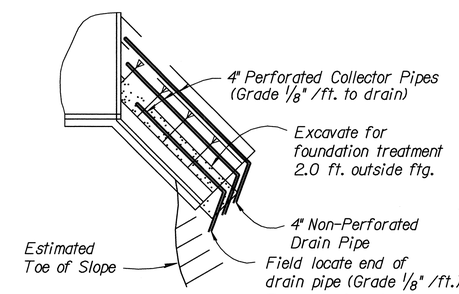


PLAN

GRANULAR BACKFILL AND FOUNDATION STABILIZATION

| NO. | DATE | REVISIONS | BY | APP'D |
|---|---|---|---|---|
| 7 | 3/2/06 | Optional Construction Joint | JPJ | KFH |
| 6 | 10/19/04 | Concrete - Class to Grade | RAM | KFH |
| 5 | 12/29/03 | Geotextile to top of wall | RAM | KFH |
| 4 | 5/15/02 | Removed Wing Height Stipulation | RAM | KFH |
| 3 | 3-28-97 | Wrap granular drains | RAM | KFH |
| 2 | 9-20-96 | Strip drain & bentonite at joint | RAM | KFH |

KANSAS DEPARTMENT OF TRANSPORTATION

RCB
AUXILIARY DETAILS

~~BR020~~

| | | | |
|---|---|---|---|
| FHWA APPROVAL | 5/22/06 | APP'D | KENNETH F. HURST |
| DESIGNED | RAM | DETAILED | RDR |
| QUANTITIES | | TRACED | |
| DESIGN CK. | RRR | DETAIL CK. | RRR |
| QUAN.CK. | | TRACE CK. | |

Std. Base File: br020.dgn
Plotted By: $$USERNAME$$ Plot Location: $UNIT$
File: $$$$$$$$$$$$DGNSPEC$$$$$$$$$$$$
Plot Date: $$$$$$TIME$$$$$$