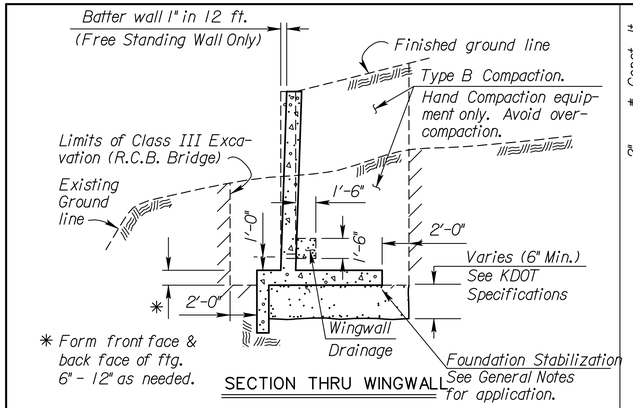

SECTION THRU WINGWALL

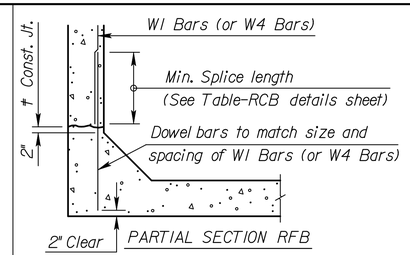

OPTIONAL BAR DETAIL

The Contractor shall have the option of using Dowel Bars to match vertical wall bars as shown, however no allowance will be made for additional steel required for bar laps.

† OPTIONAL COLD JOINT

The Contractor has the option of placing the Lower Horizontal Construction Joint at the top of the slab for RCB's or at the top of the fillet for RFB's

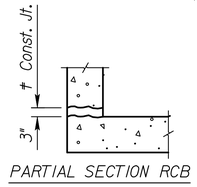

Ø Longitudinal bars shall extend through the joint to provide a minimum lap equal to the required splice length. See RCB Details Sh. for required splice length.

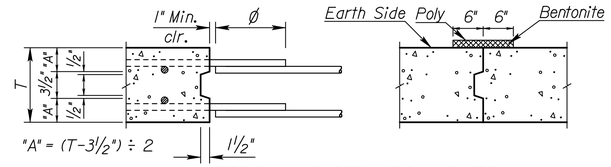

VERTICAL CONSTRUCTION JOINTS

NOTE: Vertical construction joints shall be perpendicular to the longitudinal axis of the RCB and shall be placed at any location as needed for construction and as approved by the Engineer.

NOTE: Horizontal construction joints shall be a roughened finish.

NOTE: Barrel Construction Joints located in a median with less than 5 ft. of fill or at locations specified by the Engineer, shall be protected by a bentonite based system as shown. Place the bentonite on the exterior walls and top slab. See requirements for bentonite in the KDOT Specifications for "Bridge Backwall Protection System". Material and installation of the bentonite system shall be subsidiary to the bid item "Grade 4.0 Concrete".

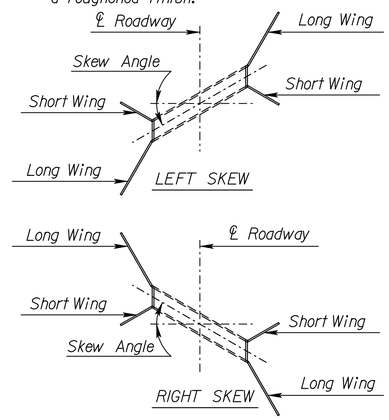

PLAN VIEW SKEWED R.C.B.

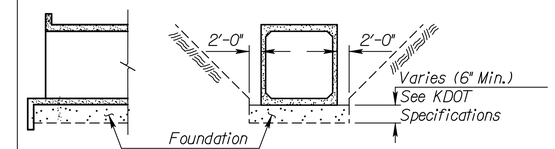

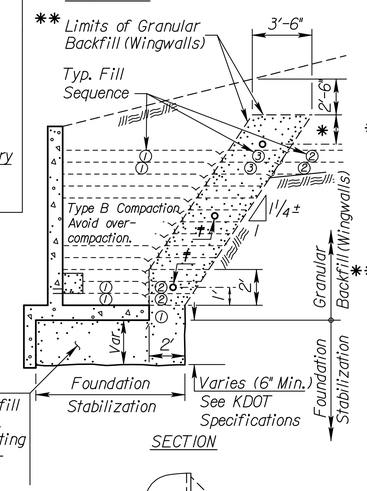

Overexcavate and backfill with granular material. Compact in 8" lifts meeting Type B Compaction requirements.

* Omit Drain Pipe when distance is less than 2'-0".

† 4" Perforated Pipe (Install ea. 4' in Elev.)

** NOTE: As an alternative, all backfill for the wall (within 2'-6" of finish grade) may be granular backfill material. Measurement for quantity shall be to the same limits as listed in the General Notes.

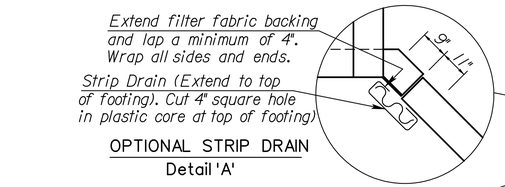

OPTIONAL STRIP DRAIN
Detail 'A'

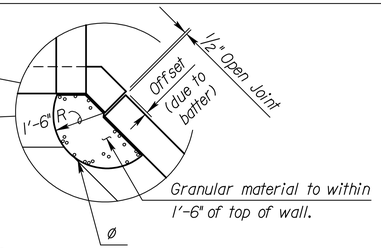

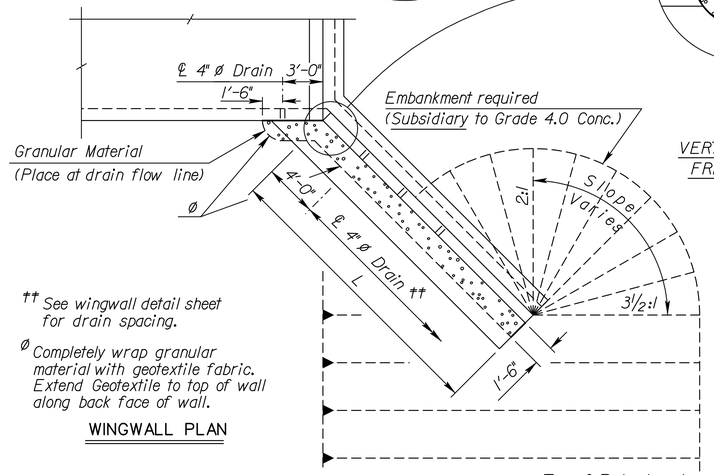

VERTICAL WINGWALL DRAINAGE FOR FREE-STANDING WINGWALLS ONLY

†† See wingwall detail sheet for drain spacing.

Ø Completely wrap granular material with geotextile fabric. Extend Geotextile to top of wall along back face of wall.

WINGWALL PLAN

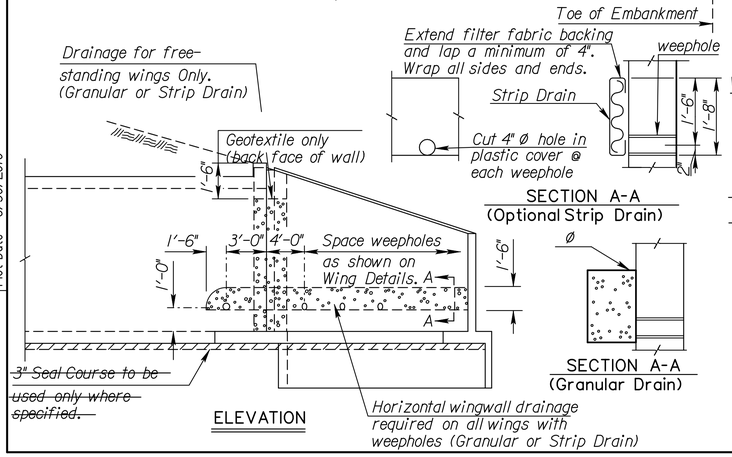

GENERAL NOTES

Wingwall Drainage:

1. All wingwalls with weepholes shall have horizontal wingwall drainage as shown. Free-standing wingwalls shall also have the vertical wingwall drainage. Strip drains may be used in lieu of aggregate. See KDOT Specifications for "Abutment Strip Drains" for strip drain requirements.
2. Construction and materials for wingwall drainage, including weepholes, geotextile fabric, granular material, and strip drain shall be subsidiary to the bid item, "Grade 4.0 Concrete". Granular material for wingwall drainage shall conform to the requirements of UD-1. Weepholes may be a formed opening or corrugated polyethylene tubing.

Wingwall Foundation Stabilization:

The Foundation Stabilization quantity has been calculated to the limits shown in the Section Thru Wingwall. The depth may be increased by the Engineer. Use Foundation Stabilization on all wingwalls unless founded on rock or granular material.

~~Seal Course:~~

~~1. Seal Course consisting of 3" min. of Commercial Grade Concrete shall be constructed to the limits directed by the Engineer. No reinforcing in the floor of the slab or wall footing shall be placed until the Seal Course has gained sufficient strength to permit working upon it without injury.~~

GENERAL NOTES

Foundation Stabilization:

The depth of Foundation Stabilization may be increased by the Engineer. The Contractor may underrun Foundation Stabilization under the barrel if founded on firm material and with the Engineer's approval. Use Foundation Stabilization on all wingwalls unless founded on rock or granular material.

Granular Backfill (Wingwalls):

1. In locations where the material behind the wingwall consist of soils judged as high plasticity clays, fat clays, expansive clays or organic clays, Granular Backfill (Wingwalls) shall be used. Granular Backfill construction may be used separately or combined with Foundation Stabilization as directed by the Engineer.
2. Measurement for the bid item, "Granular Backfill (Wingwalls)", shall be measured in Cubic Yards to the theoretical limits as shown. Drainage pipe, rodent screens, and excavation shall be subsidiary to the bid item, "Granular Backfill (Wingwalls)".
3. Material for Granular Backfill (Wingwalls) shall conform to the requirements of UD-1 or BD-1. Drainage Pipe shall be corrugated polyethylene tubing conforming to KDOT Specifications.

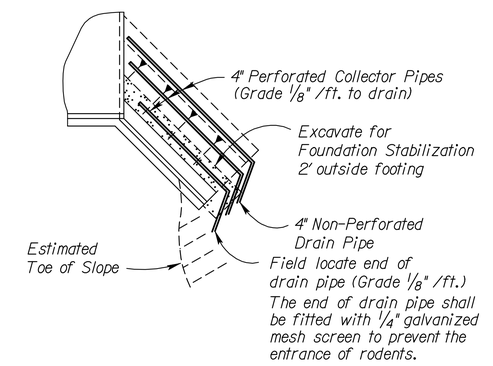

GRANULAR BACKFILL AND FOUNDATION STABILIZATION

NO.	DATE	REVISIONS	BY	APP'D
3	7/14/08	Change Type 'C' Compaction to 'B'	JPJ	KFH
2	10/16/06	Add Found. Stab. Details and Notes	JPJ	KFH
1	3/2/06	Optional Construction Joint	JPJ	KFH

KANSAS DEPARTMENT OF TRANSPORTATION

RCB
AUXILIARY DETAILS

~~BR020~~

FHWA APPROVAL		11/01/06	APP'D		KENNETH F. HURST
DESIGNED	RAM	DETAILED	RDR	QUANTITIES	TRACED
DESIGN CK.	RRR	DETAIL CK.	RRR	QUAN.CK.	TRACE CK.

Std. Base File:	br020.dgn
Plotted By:	rjm
Plot Location:	$$KDOTGRPB
File:	i:\2009\09307\09307-000-Aux standard.dgn
Plot Date:	6/30/2010