STATE	PROJECT NO.	YEAR	SHEET NO.	TOTAL SHEETS
KANSAS	472-84071	2005	B3.19	

DATE	BY

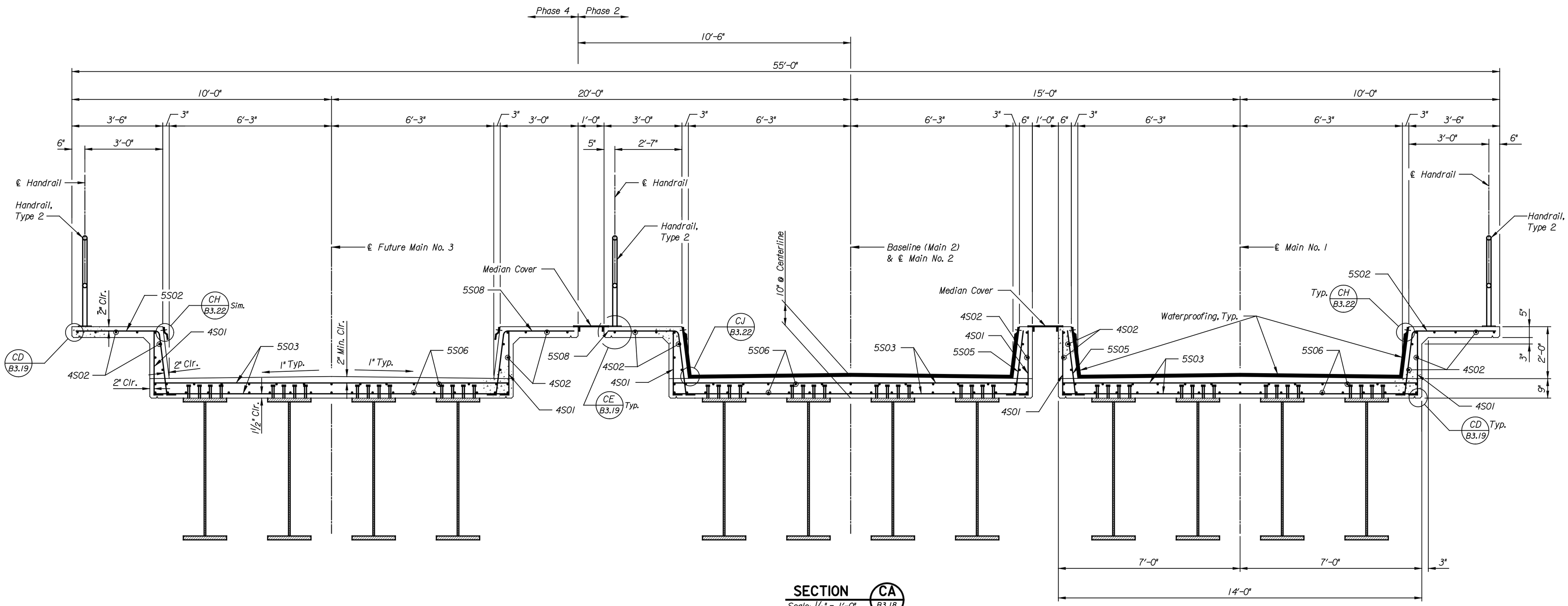

SECTION CA B3.18
Scale: ½" = 1'-0"

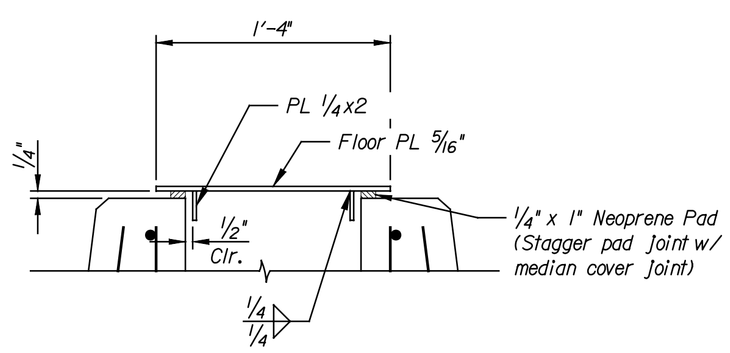

SECTION CB B3.18
Scale: 1½" = 1'-0"

Note:
Minimum Length of Median Cover Plate, 5'-0"
Maximum Length of Median Cover Plate, 8'-0"

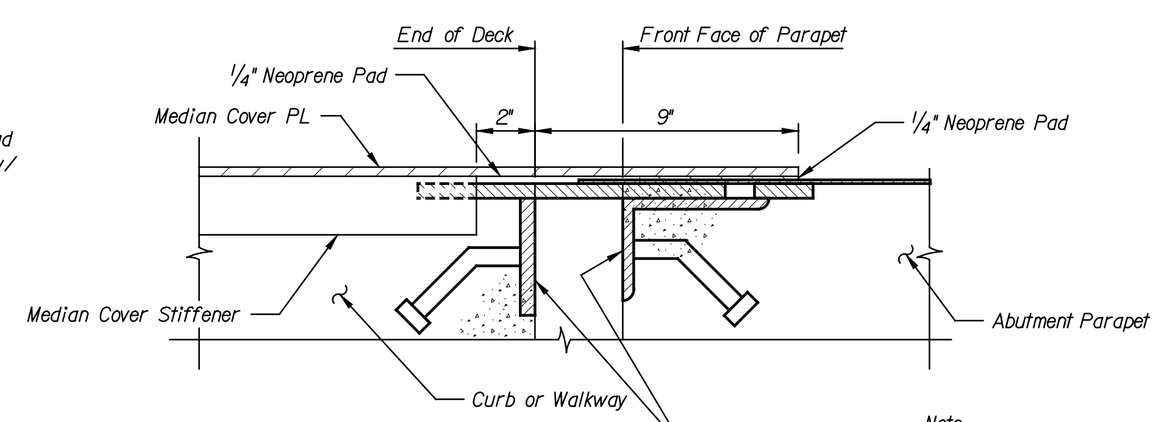

SECTION CC B3.18
Scale: 3" = 1'-0"

Note:
Neoprene Pad is subsidiary to deck.

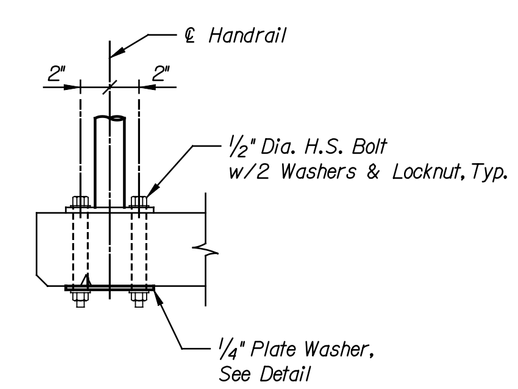

DETAIL CE B3.19
Scale: 1½" = 1'-0"

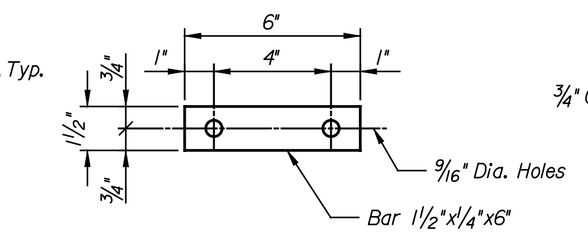

PLATE WASHER DETAIL
Scale: 3" = 1'-0"
Galvanize After Fabrication

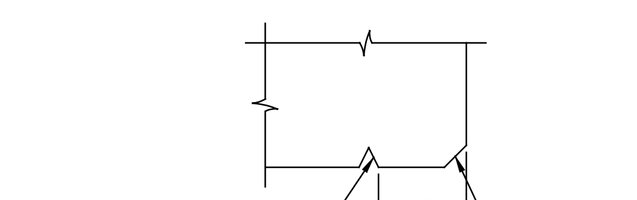

DETAIL CD B3.19
Scale: 3" = 1'-0"

NO.	DATE	REVISIONS	BY	APP'D
3				
2				
1				

CITY OF WICHITA

WICHITA CENTRAL CORRIDOR

MURDOCK
DECK SECTION & DETAILS

This sheet designed by:

HNTB
ARCHITECTS ENGINEERS PLANNERS

LOCATION:
BNSF BR. 21L5 LINE SEGMENT 7400
WICHITA, KS

SHEET NO.	OF	SCALE AS NOTED	APP'D		
DESIGNED	CAP	DETAILED	DJJ	QUANTITIES	DJJ	TRACED	DJJ
DESIGN CK.	SAS	DETAIL CK.	JWH	QUAN.CK.	DMH	TRACE CK.	DMH

Plotted on: 04-JAN-2005 13:08 $time$
djamison Plot Queue: $queue$
Plot Scale: $scale$ Pen Table: $pentable$
Design Filename: k:\b280409\Bridges\Dec2004\Base Bid\Murdock\drawings\mi8.dgn.