STATE	PROJECT NO.	YEAR	SHEET NO.	TOTAL SHEETS
KANSAS	472-84071	2005	B5.28	

	EPOXY COATED	DESIGN MARK	BENDING MARK	SIZE	NO.	LENGTH	DIMENSIONS a	b	c	d	e	f
DECK 1 - PHASE 2	X	4S01	B	4	156	3'-1"	2'-5"	8"				
	X	4S02	A	4	24	31'-1"	31'-1"					
	X	4S03	A	4	12	19'-4"	19'-4"					
	X	5S02	Z	5	78	6'-5"	10"	3 1/2"	3'-2"	2'-5"	2'-4 3/4"	
	X	5S03	A	5	156	13'-8"	13'-8"					
	X	5S05	D	5	78	3'-3"	2'-5"	10"	1 1/4"	9 7/8"		
	X	5S06	A	5	34	60'-0"	60'-0"					
	X	5S07	A	5	34	19'-4"	19'-4"					
DECK 2 - PHASE 2	X	4S01	B	4	156	3'-1"	2'-5"	8"				
	X	4S02	A	4	22	31'-1"	31'-1"					
	X	4S03	A	4	11	19'-4"	19'-4"					
	X	5S03	A	5	156	13'-8"	13'-8"					
	X	5S05	D	5	78	3'-3"	2'-5"	10"	1 1/4"	9 7/8"		
	X	5S06	A	5	34	60'-0"	60'-0"					
	X	5S07	A	5	34	19'-4"	19'-4"					
	X	5S08	Z	5	78	5'-11"	10"	3 5/8"	2'-8"	2'-5"	2'-4 3/4"	
DECK 3 - PHASE 4	X	4S01	B	4	156	3'-1"	2'-5"	8"				
	X	4S02	A	4	30	31'-1"	31'-1"					
	X	4S03	A	4	15	19'-4"	19'-4"					
	X	5S02	Z	5	78	6'-5"	10"	3 1/2"	3'-2"	2'-5"	2'-4 3/4"	
	X	5S03	A	5	156	13'-8"	13'-8"					
	X	5S06	A	5	34	60'-0"	60'-0"					
	X	5S07	A	5	34	19'-4"	19'-4"					
	X	5S08	Z	5	78	5'-11"	10"	3 5/8"	2'-8"	2'-5"	2'-4 3/4"	

EPOXY COATED	DESIGN MARK	BENDING MARK	SIZE	NO.	LENGTH	DIMENSIONS a	b	c	d	e	f

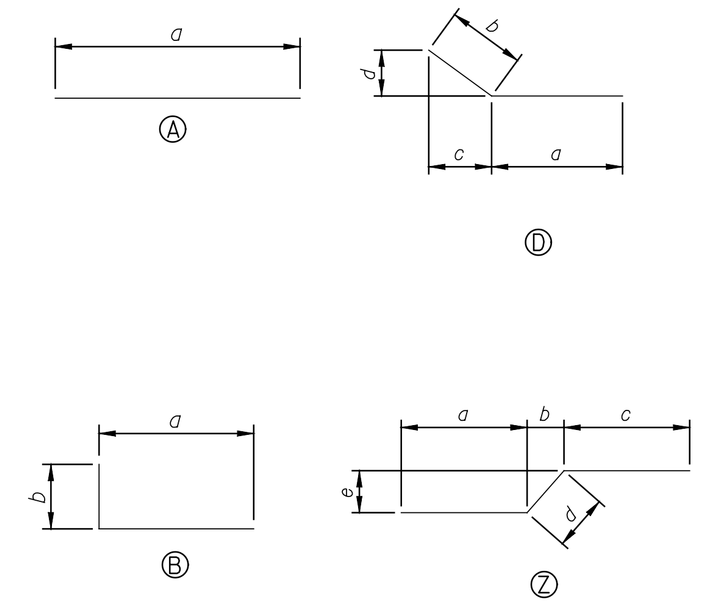

NOTE:
Bar dimensions are out-to-out.

NO.	DATE	REVISIONS	BY	APP'D
3				
2				
1				

CITY OF WICHITA

WICHITA CENTRAL CORRIDOR

2ND STREET
DECK REINFORCING DETAILS

SHEET NO.	OF	SCALE AS NOTED	APP'D				
DESIGNED	FKD	DETAILED	DJJ	QUANTITIES	DJJ	TRACED	DJJ
DESIGN CK.	DMH	DETAIL CK.	EDY	QUAN.CK.	DMH	TRACE CK.	DMH

LOCATION:
BNSF BR. 212.0 WICHITA, KS LINE SEGMENT 7400

This sheet designed by:

HNTB
ARCHITECTS ENGINEERS PLANNERS

DATE	BY

Plotted on: 06-JAN-2005 15:05 $time$
scindrell Plot Queue: $queue$
Plot Scale: $scale$ Pen Table: $pentable$
Design Filename: k:\b29049\Bridges\Dec2004\Base Bid\02nd Street\drawings\s12b.dgn