STATE	PROJECT NO.	YEAR	SHEET NO.	TOTAL SHEETS
KANSAS	472-84071	2005	B8.22	

	EPOXY COATED	DESIGN MARK	BENDING MARK	SIZE	NO.	LENGTH	DIMENSIONS a	b	c	d	e	f
DECK	×	5S01	B	5	118	3'-1"	2'-7"	6"				
	×	5S02	D	5	118	3'-1"	6"	2'-7"	3 1/4"	2'-6 7/8"		
	×	5S03	A	5	164	16'-0"	16'-0"					
	×	5S04	A	5	164	28'-6"	28'-6"					
	×	5S05	A	5	82	25'-6"	25'-6"					
	×	5S06	AQ	5	118	9'-7"	4'-4"	8 3/8"	2'-4 1/8"	2'-1 7/8"	2'-4"	3"
	×	5S07	D	5	118	3'-8"	1'-11 1/4"	1'-8"	2"	1'-8"		
	×	5S08	A	5	236	25'-0"	25'-0"					
	×	5S09	A	5	236	18'-5"	18'-5"					
HANDRAIL	×	4R01	C	4	329	1'-3"	4 1/2"	5"	5"			
	×	4R02	A	4	4	15'-9"	15'-9"					
	×	4R03	A	4	4	28'-8"	28'-8"					
	×	4R04	A	4	2	25'-8"	25'-8"					
	×	4R05	H	4	14	2'-6"	6 3/8"	6 3/8"	2"			
	×	4R06	C	4	7	1'-2"	5 3/8"	4"	4"			
	×	4R07	C	4	7	1'-5"	6 1/4"	5"	5"			
	×	4R08	C	4	7	1'-8"	7 1/8"	6"	6"			
	×	4R09	A	4	4	38'-0"	38'-0"					
	×	5R01	E	5	172	10'-10"	5'-1 1/2"	7"	5'-1 1/2"	5"		
	×	5R02	AR	5	10	11'-10"	2'-0"	3'-7 5/8"	1 1/2"	3'-7 5/8"	2 1/2"	8"
	×	5R03	A	5	8	15'-9"	15'-9"					
	×	5R04	A	5	8	28'-8"	28'-8"					
	×	5R05	A	5	4	25'-8"	25'-8"					
	×	5R06	E	5	52	9'-8"	4'-6 1/2"	7"	4'-6 1/4"	5"		
	×	5R07	AR	5	4	10'-8"	2'-0"	3'-0 5/8"	1 1/2"	3'-0 5/8"	2 1/2"	8"
	×	5R08	A	5	4	33'-9"	33'-9"					
UTILITY BOX		6A01	A	6	78	7'-8"	7'-8"					
		6A02	A	6	40	9'-8"	9'-8"					
		6A03	C	6	31	9'-2"	7'-8"	9"	9"			
		6A04	C	6	22	11'-2"	9'-8"	9"	9"			
		6A05	A	6	30	12'-9"	12'-9"					
		6A06	A	6	50	17'-8"	17'-8"					
		6A07	A	6	22	6'-8"	6'-8"					
		6A08	A	6	69	1'-8"	1'-8"					
		6A10	B	6	18	3'-1"	2'-0 1/2"	1'-0"				
		6A11	A	6	4	3'-11"	3'-10 7/8"					
		6A12	A	6	4	3'-4"	3'-3 5/8"					
		6A13	A	6	4	1'-8"	1'-8"					
		6A14	A	6	8	2'-0"	1'-11 1/4"					
		6A15	A	6	18	11'-8"	11'-8"					
		6A16	A	6	4	1'-3"	1'-2 7/8"					
		6A17	A	6	8	3'-6"	3'-6"					
WINGWALL EXTENSION	×	4W01	C	4	64	2'-8"	1'-8"	6"	6"			
	×	4W02	A	4	8	37'-9"	37'-9"					
	×	4W03	A	4	82	2'-6"	2'-6"					
	×	4W04	A	4	4	23'-0"	23'-0"					
	×	4A04	C	4	82	1'-5"	5"	6"	6"			
	×	4A05	A	4	8	41'-0"	41'-0"					
	×	4A06	A	4	164	1'-3"	1'-3"					
	×	4A07	C	4	8	3'-4"	2'-10"	6"				

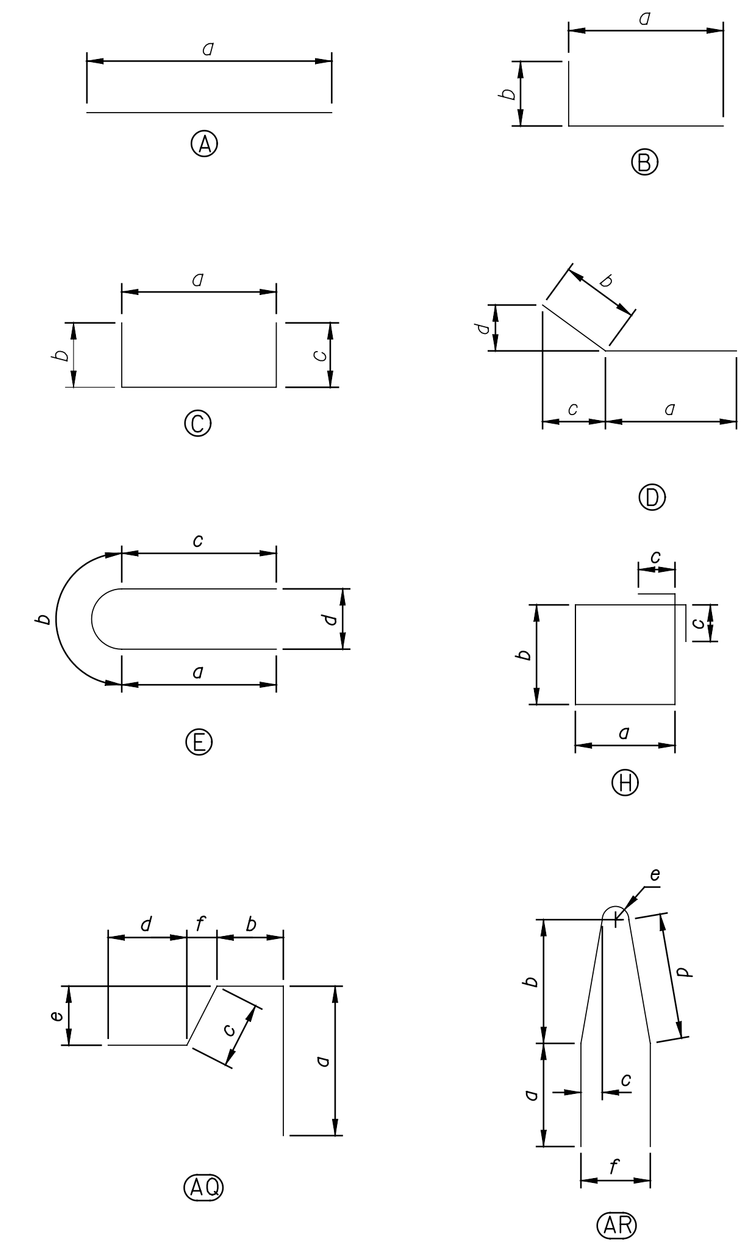

This sheet designed by:

HNTB

ARCHITECTS ENGINEERS PLANNERS

NO.	DATE	REVISIONS	BY	APP'D
3				
2				
1	9/04	REINFORCING CHANGE	JWH	

CITY OF WICHITA

WICHITA CENTRAL CORRIDOR

DOUGLAS AVENUE
REINFORCING DETAILS

LOCATION: BNSF BR. 210.8 WICHITA, KS LINE SEGMENT 7400

SHEET NO.	OF	SCALE AS NOTED	APP'D				
DESIGNED	DMH	DETAILED	DJJ	QUANTITIES	DJJ	TRACED	DJJ
DESIGN CK.	JWH	DETAIL CK.	JWH	QUAN.CK.	DMH	TRACE CK.	DMH

DATE | BY

Plotted on: 04-JAN-2005 12:48 $time$
djamison Plot Queue: $queue$
Plot Scale: $scale$ Pen Table: $pentable$
Design Filename: K:\B29049\Bridges\Dec2004\Base B18\Douglas\Drawings\d15.dgn