STATE	PROJECT NO.	YEAR	SHEET NO.	TOTAL SHEETS
KANSAS	472-84071	2005	W4.18	

DATE	BY

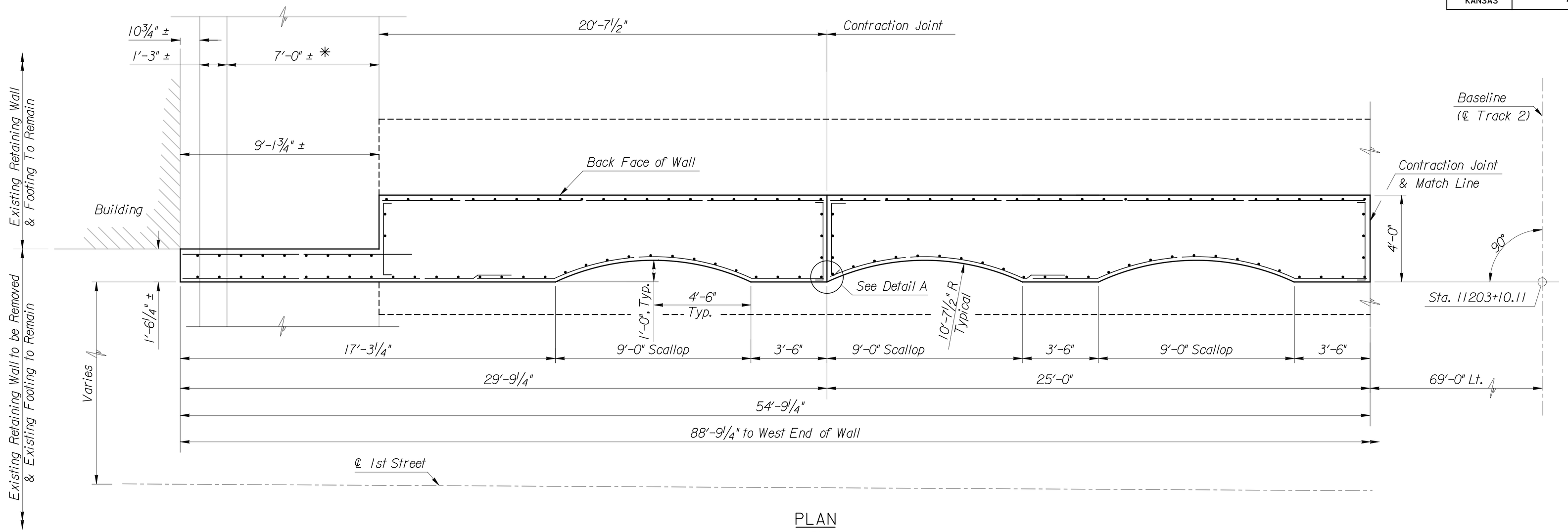

PLAN

Scale: ⅜"=1'-0"

* The Contractor shall verify the location of the west edge of the existing retaining wall footing, prior to driving piles.

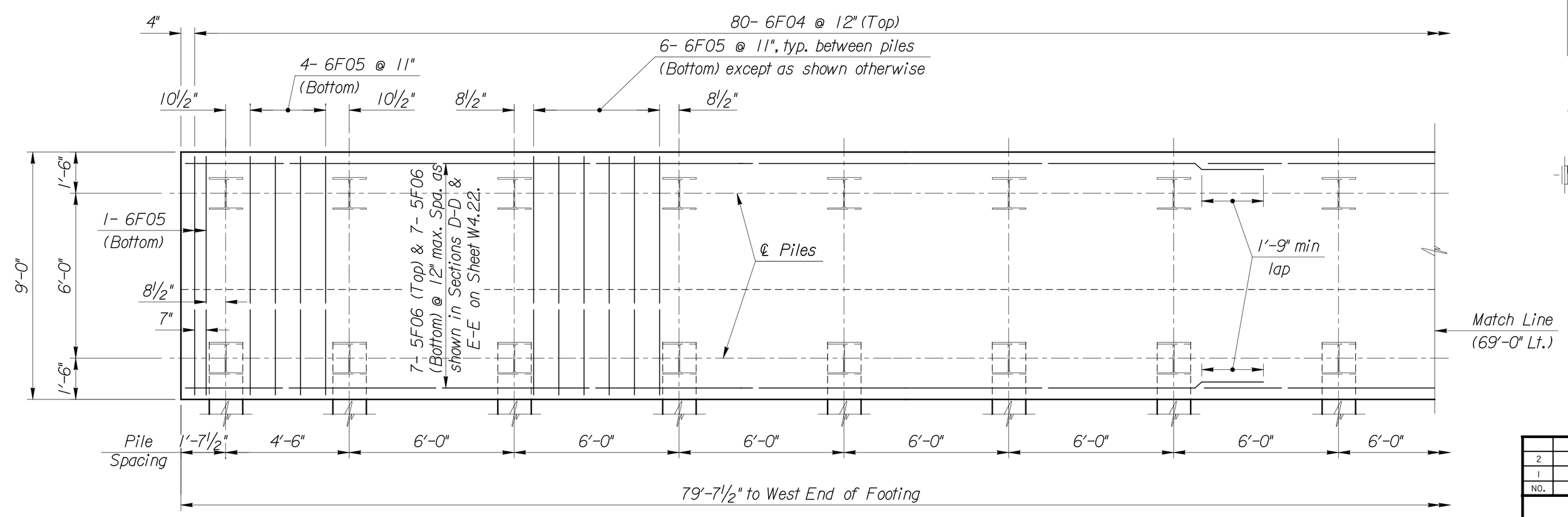

FOOTING PLAN

Scale: ⅜"=1'-0"

Note: For Detail A, see Sheet W4.22.

NO.	DATE	REVISIONS	BY	APP'D
2				
1				

CITY OF WICHITA

WICHITA CENTRAL CORRIDOR

IST STREET WALL (SE)
PLAN & FOOTING PLAN - EAST PART

SHEET NO.	OF	SCALE		APP'D	
DESIGNED	AIS	DETAILED	AIS	QUANTITIES	TRACED
DESIGN CK.	CAP	DETAIL CK.	CAP	QUAN.CK.	TRACE CK.

This sheet designed by:

HNTB
ARCHITECTS ENGINEERS PLANNERS

Plotted on: Tuesday January 04, 2005 09:18 AM
Mikayes Plot Queue: \\cbsw00\KC029049-PS
Plot Scale: 0.083333in.000000 Pen Table: \\cvpw00\jobs\29049\Bridge\Cadd\Library\plotpen\Fullsize.pen
Design Filename: \\cvpw00\jobs\29049\Bridge\Cadd\Details\st_st_SE.plan.&_ftg.plan.(East).dgn