STATE	PROJECT NO.	YEAR	SHEET NO.	TOTAL SHEETS
KANSAS	472-84071	2005	DA1.15	

NO.	DATE	BY

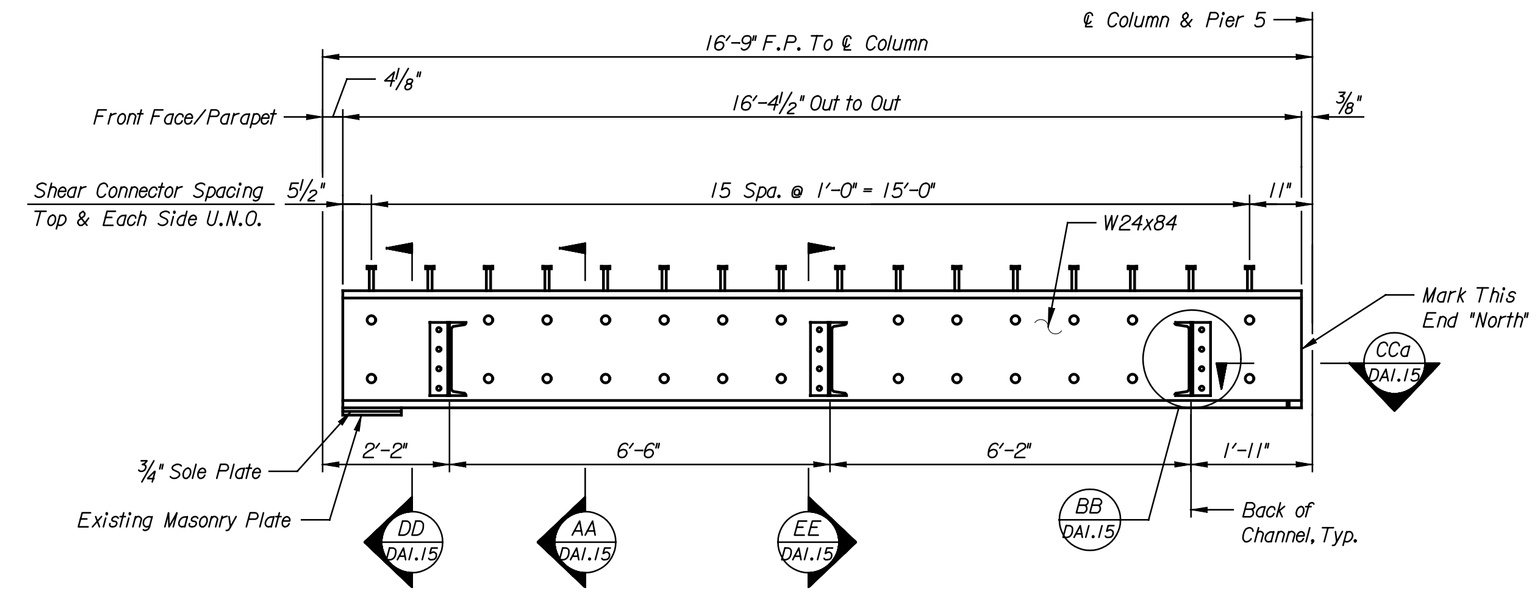

ELEVATION X (DA1.13)
Scale: 1/2" = 1'-0"
Beam Pier 1 To F/Parapet Opposite Hand

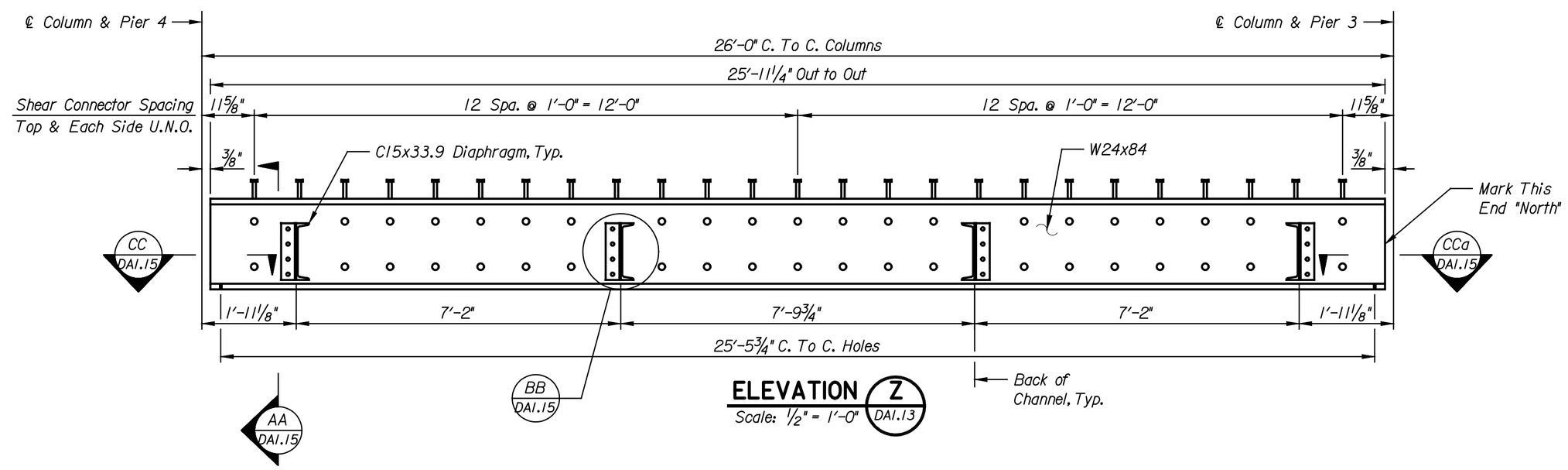

ELEVATION Z (DA1.13)
Scale: 1/2" = 1'-0"

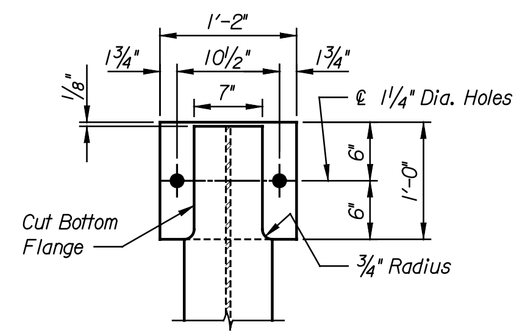

PLAN
Scale: 1" = 1'-0"

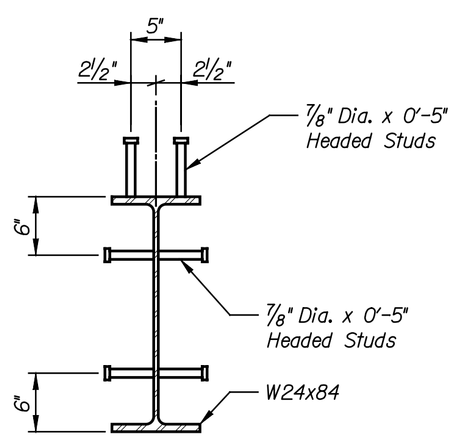

SECTION AA (DA1.15)
Scale: 1" = 1'-0"

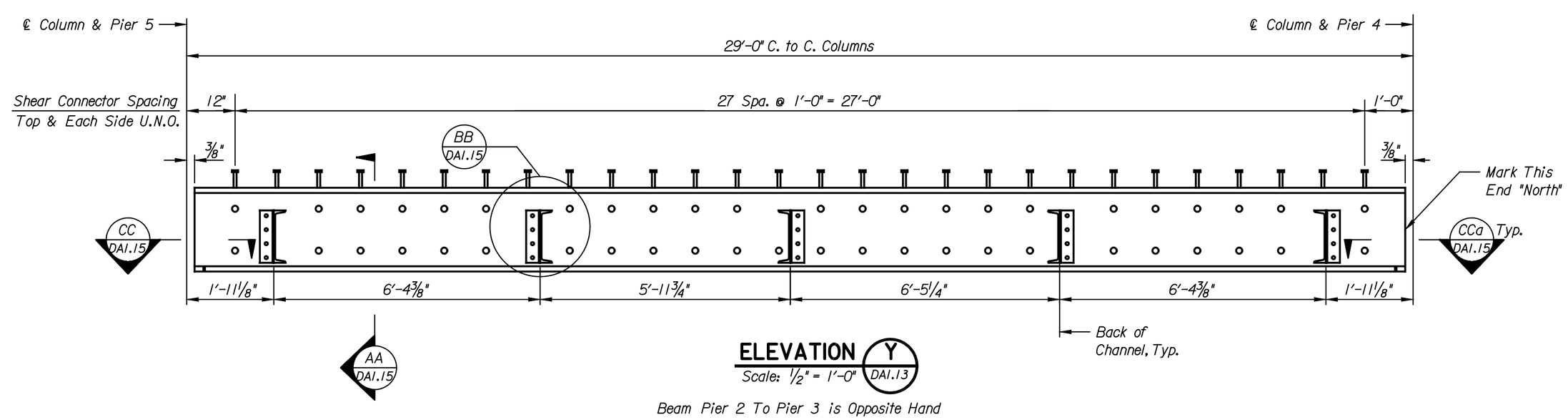

ELEVATION Y (DA1.13)
Scale: 1/2" = 1'-0"
Beam Pier 2 To Pier 3 is Opposite Hand

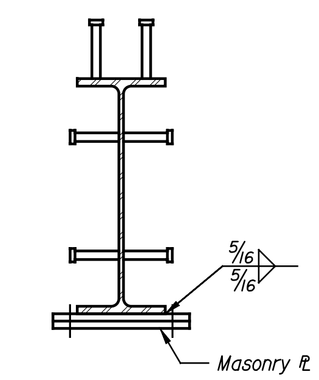

SECTION DD (DA1.15)
Scale: 1" = 1'-0"

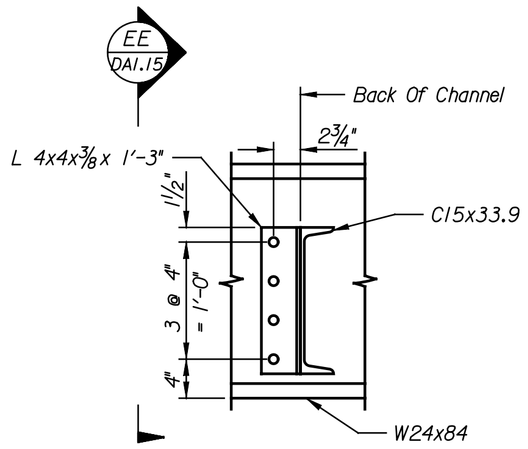

DETAIL BB (DA1.15)
Scale: 1" = 1'-0"

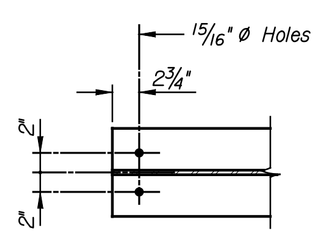

SECTION CCa (DA1.15)
Scale: 1" = 1'-0"

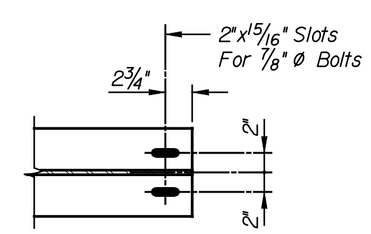

SECTION CC (DA1.15)
Scale: 1" = 1'-0"

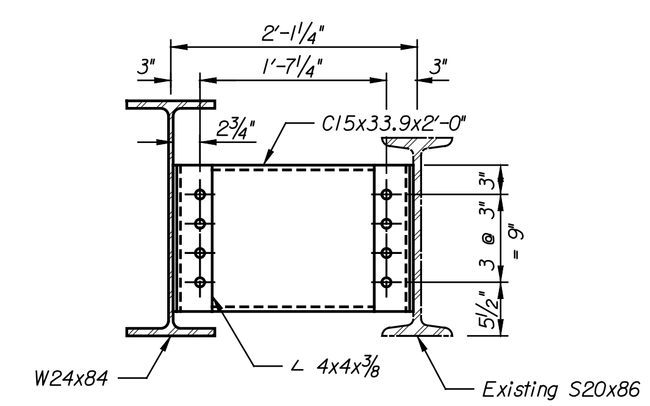

SECTION EE (DA1.15)
Scale: 1" = 1'-0"

NOTE:
Dimensions to diaphrams on proposed W24x84 members are measured to back of existing channel.

NO.	DATE	REVISIONS	BY	APP'D
3				
2				
1				

CITY OF WICHITA

WICHITA CENTRAL CORRIDOR
ALTERNATE 8
DOUGLAS AVENUE
FASCIA BEAM DETAILS

SHEET NO.	OF	SCALE AS NOTED	APP'D		
DESIGNED	FKD	DETAILED	WFB	QUANTITIES	DJJ	TRACED	DJJ
DESIGN CK.	CMS	DETAIL CK.	JWH	QUAN.CK.	DMH	TRACE CK.	DMH

LOCATION:
BNSF BR. 210.8
WICHITA, KS
LINE SEGMENT 7400

This sheet designed by:

HNTB
ARCHITECTS ENGINEERS PLANNERS

Plotted on: 04-JAN-2005 12:26 $time$
djamison Plot Queue: $queue$
Plot Scale: $scale$ Pen Tables: $pentable$
Design Filename: K:\B29049\Bridges\Sec2004\Douglas Alternate\Drawings\d05a.dgn.