STATE	PROJECT NO.	YEAR	SHEET NO.	TOTAL SHEETS
KANSAS	472-84071	2005	DA1.9	

DATE	BY

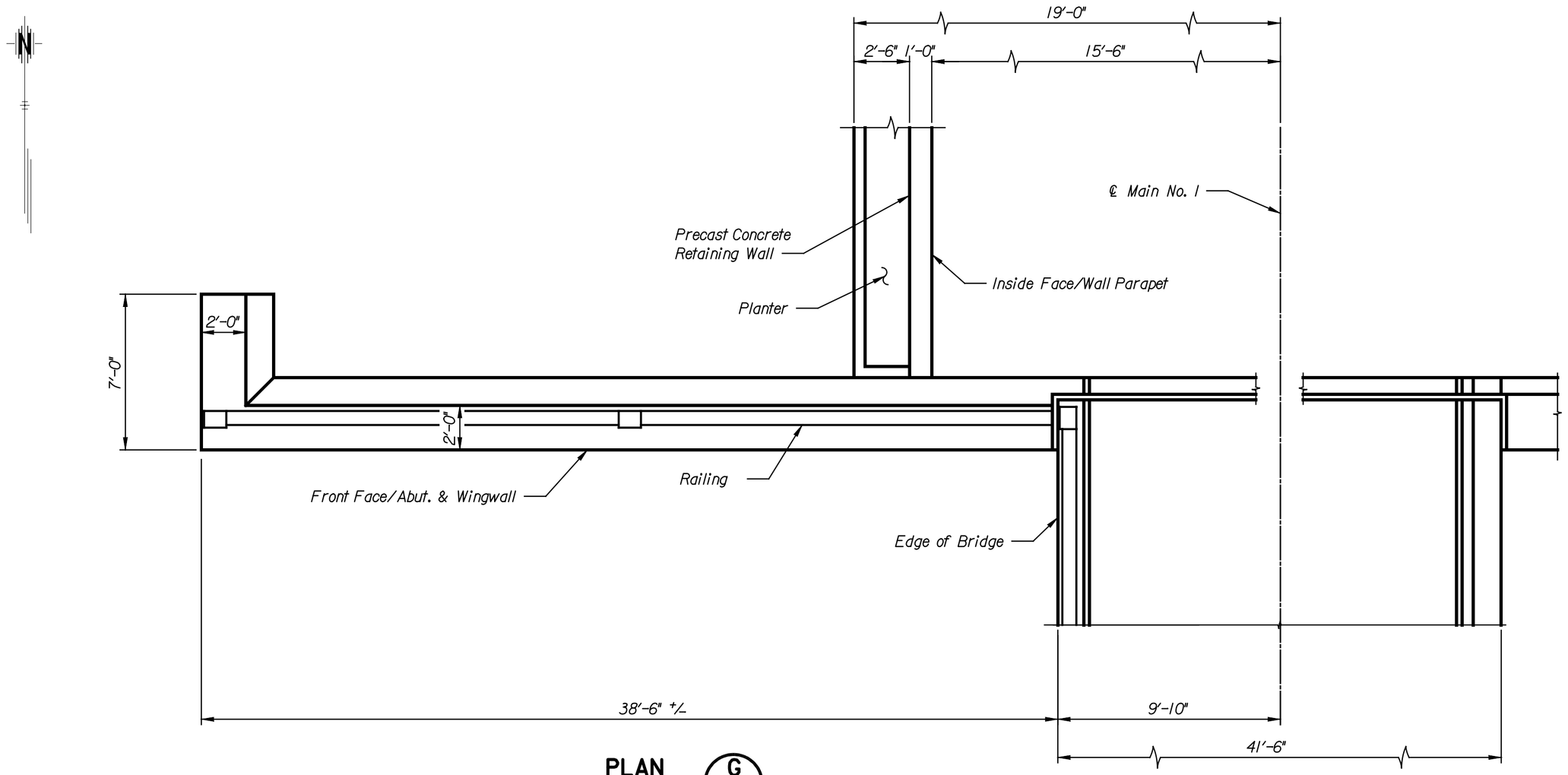

PLAN (G / DA1.8)

Scale: 1/4" = 1'-0"

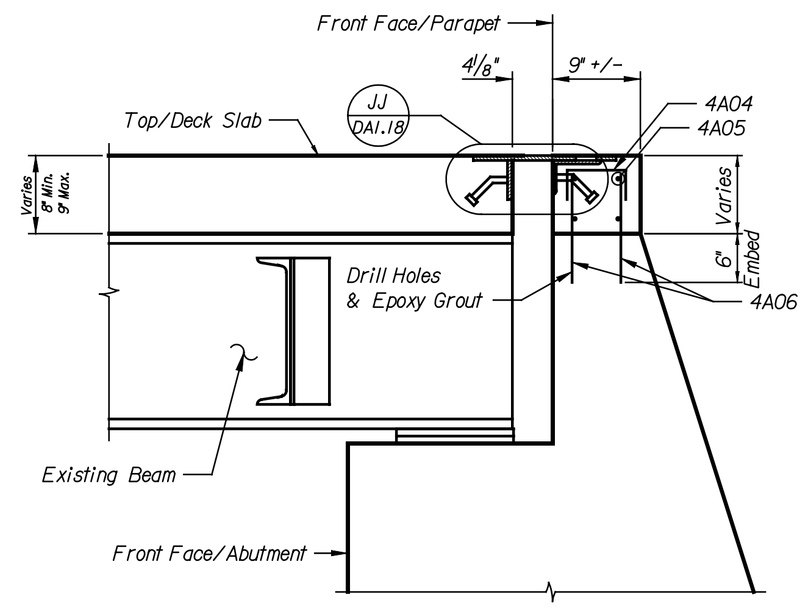

Note:
For limits of backwall modifications, see sheet B8.8.

SECTION (E / DA1.8)

Scale: 1" = 1'-0"

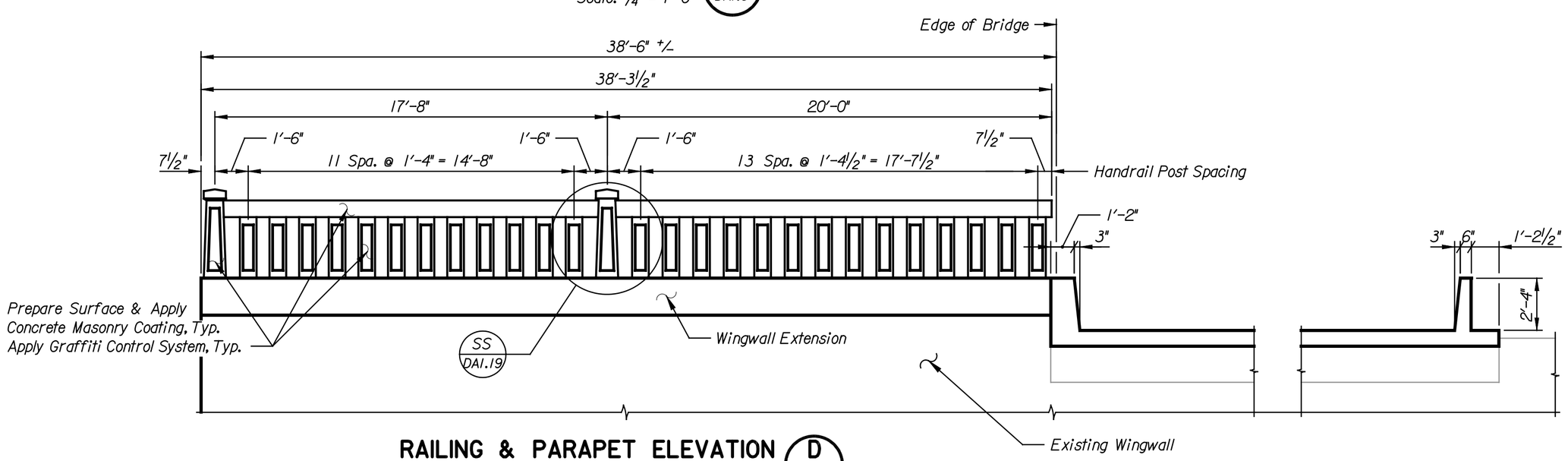

RAILING & PARAPET ELEVATION (D / DA1.8)

Scale: 1/4" = 1'-0"

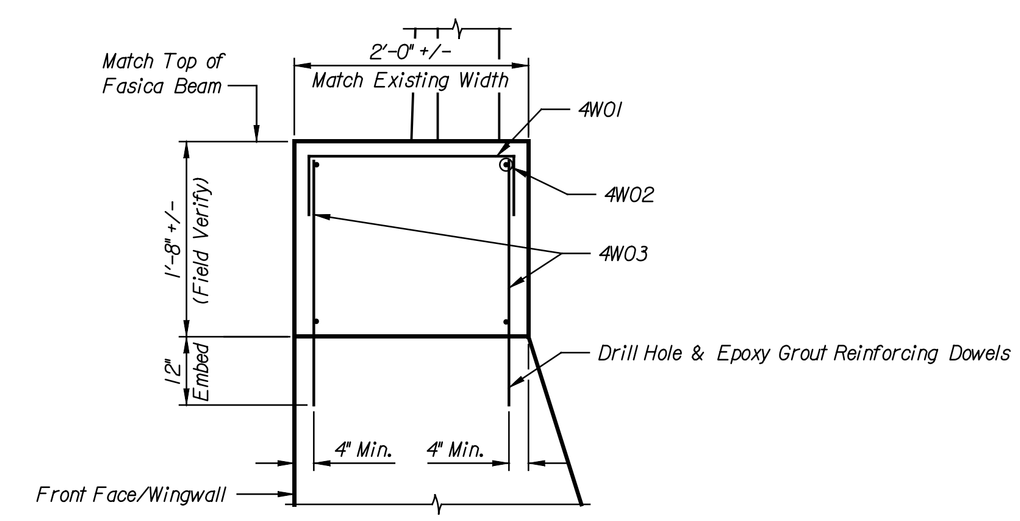

SECTION (F / DA1.9)

Scale: 1" = 1'-0"

NOTE:
Hole & Epoxy Grout is subsidiary to concrete.

REFERENCE:
Color schedule, see sheet DA1.20.

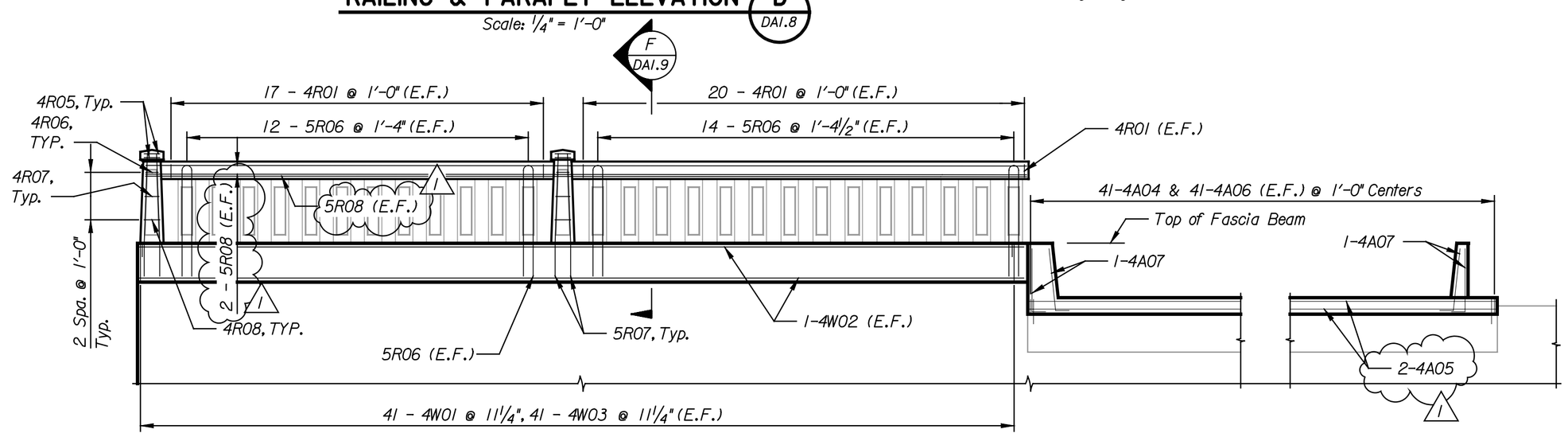

RAILING & PARAPET REINFORCING ELEVATION (D / DA1.8)

Scale: 1/4" = 1'-0"

This sheet designed by:

HNTB
ARCHITECTS ENGINEERS PLANNERS

NO.	DATE	REVISIONS	BY	APP'D
3				
2				
1	9/04	REINFORCING CHANGE	JWH	

CITY OF WICHITA

WICHITA CENTRAL CORRIDOR
ALTERNATE 8
DOUGLAS AVENUE
ABUTMENT 1 DETAILS

LOCATION: BNSF BR. 210.8 LINE SEGMENT 7400 WICHITA, KS

SHEET NO.	OF	SCALE	AS NOTED	APP'D			
DESIGNED	DMH	DETAILED	DJJ	QUANTITIES	DJJ	TRACED	DJJ
DESIGN CK.	JWH	DETAIL CK.	JWH	QUAN.CK.	DMH	TRACE CK.	DMH

Plotted on: 04-JAN-2005 12:25 $time$
djamison Plot Queue: $queue$
Plot Scale: $scale$ Pen Table: $pentable$
Design Filename: K:\B29049\BridgeDec2004\Douglas Alternate\Drawings\d12.dgn.