E.F. INDICATES EACH FACE.
N.F. INDICATES NEAR FACE.
F.F. INDICATES FAR FACE.

STATE	PROJECT NO.	YEAR	SHEET NO.	TOTAL SHEETS
KANSAS	54–87 K–8258–01	2007	129	556

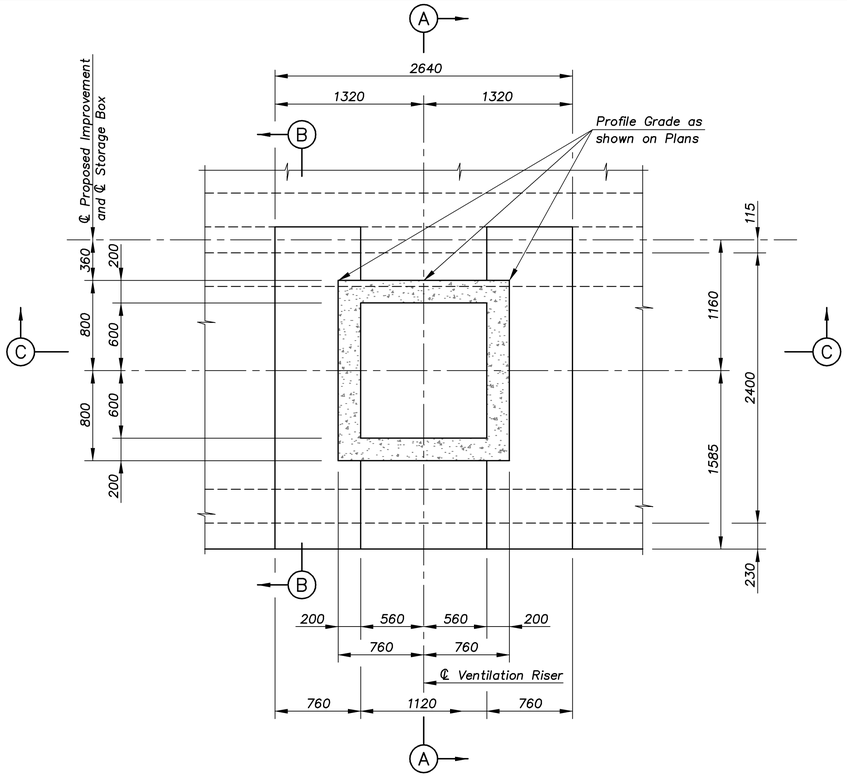

PART PLAN OF VENTILATION RISER

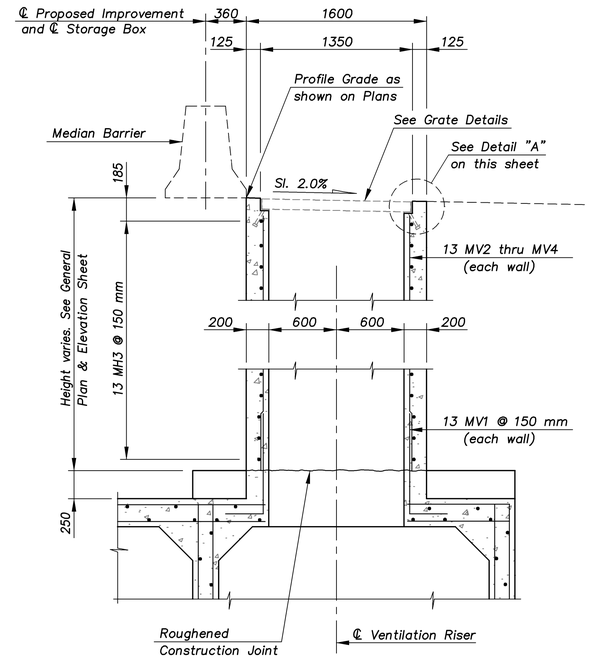

SECTION A–A

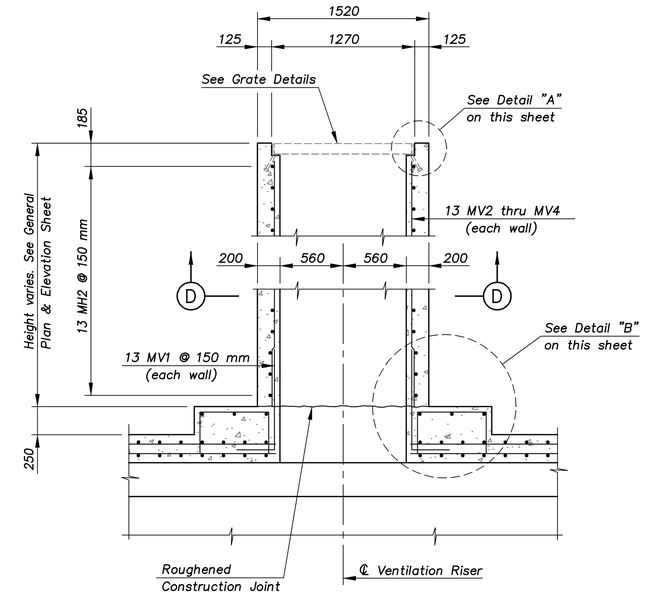

SECTION C–C

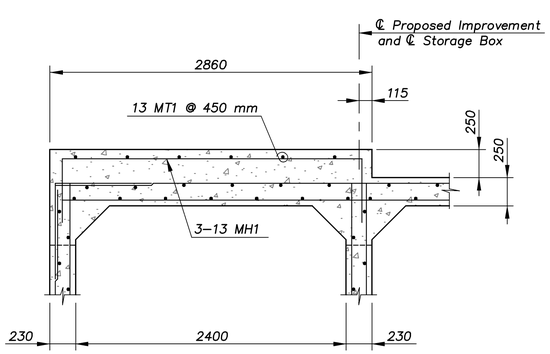

SECTION B–B

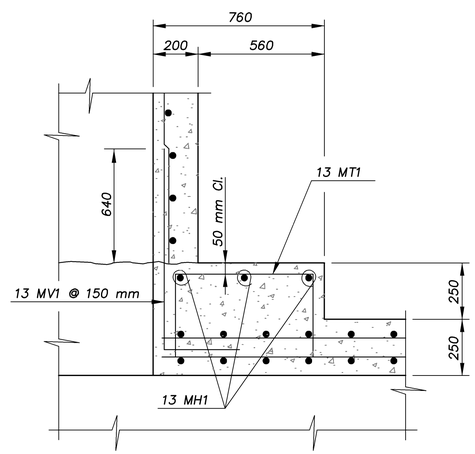

DETAIL "B"

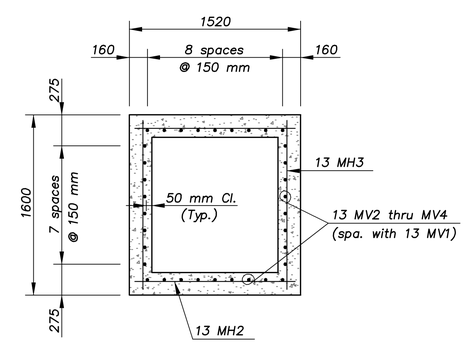

SECTION D–D

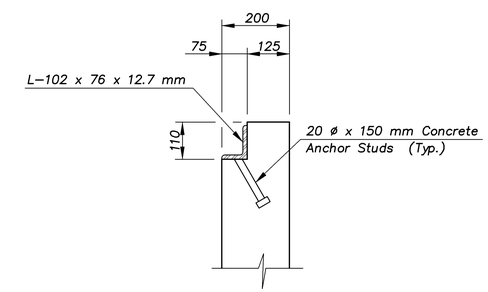

DETAIL "A"

KANSAS DEPARTMENT OF TRANSPORTATION

DOUBLE 2.4 x 2.4 m STORAGE BOX
VENTILATION RISER DETAILS

Proj. No. 54–87 K–8258–01 SEDGWICK COUNTY

CFS
Cook, Flatt & Strobel
ENGINEERS, P.A.

DESIGNED	R.S.C.	SCALE	Varies
DETAILED	T.R.G.	DATE	
QUANTITIES	T.R.G.	SHEET	6 OF 9

Storage–RCB/kellogg 1:250