E.F. INDICATES EACH FACE.
N.F. INDICATES NEAR FACE.
F.F. INDICATES FAR FACE.

| STATE | PROJECT NO. | YEAR | SHEET NO. | TOTAL SHEETS |
|---|---|---|---|---|
| KANSAS | 54–87 K–8258–01 | 2007 | 188 | 556 |

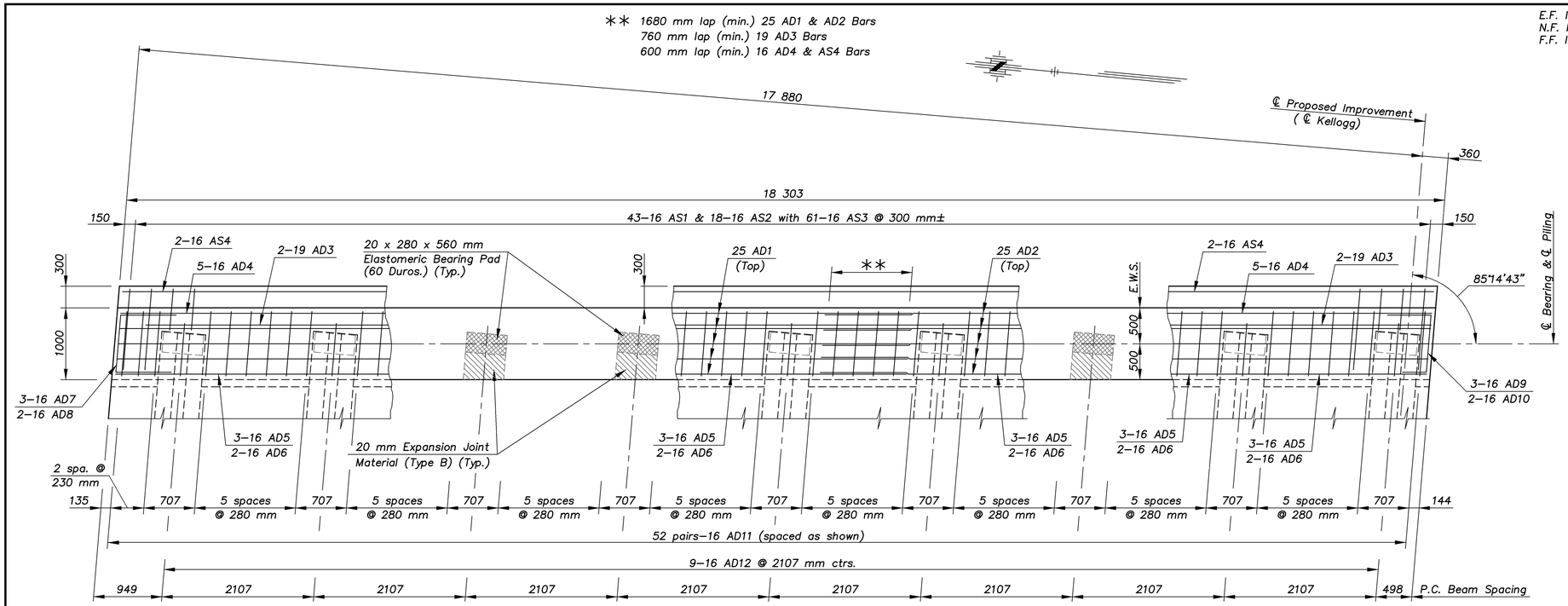


PLAN OF ABUTMENT DIAPHRAGM

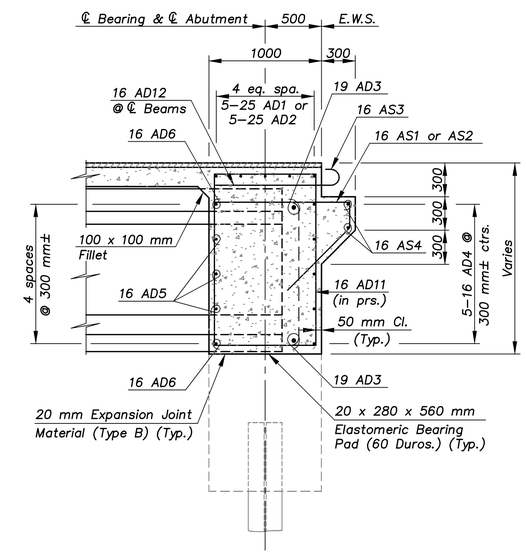


SECTION A–A

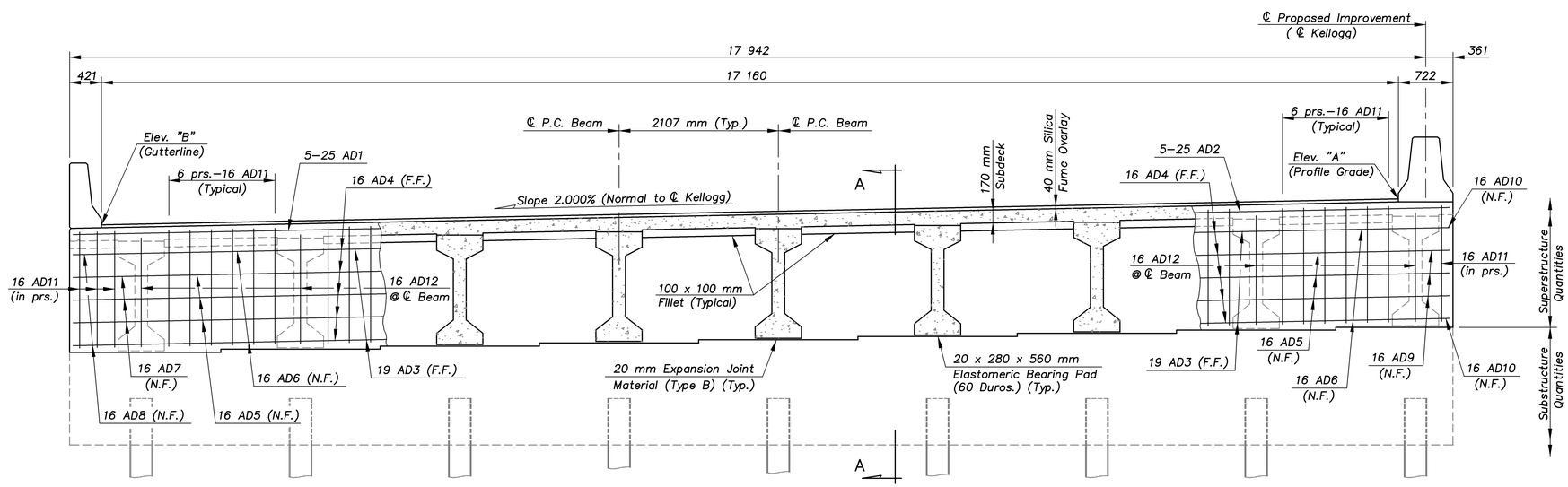


ELEVATION OF ABUTMENT DIAPHRAGM

TABLE OF ELEVATIONS *

| Location | Elev. "A" | Elev. "B" |
|---|---|---|
| Abutment No. 1 | 416.592 | 416.263 |
| Abutment No. 2 | 415.987 | 415.665 |

* Elevations shown are at ℄ Abutment.

1:100

ARMOUR/ABUTMENT

KANSAS DEPARTMENT OF TRANSPORTATION

BR. NO. 54–87–30.81(700) W.B. STA. 3+378.725

ABUTMENT DIAPHRAGM DETAILS

KELLOGG AVENUE OVER ARMOUR ROAD

Proj. No. 54–87 K–8258–01 SEDGWICK COUNTY

CFS
Cook, Flatt & Strobel
ENGINEERS, P.A.

| | | | |
|---|---|---|---|
| DESIGNED | R.S.C. | SCALE | Varies |
| DETAILED | T.R.G. | DATE | |
| QUANTITIES | T.R.G. | SHEET | 8 OF 39 |