STATE	PROJECT NO.	YEAR	SHEET NO.	TOTAL SHEETS
KANSAS	54–87 K–8258–01	2007	194	556

E.F. INDICATES EACH FACE.
N.F. INDICATES NEAR FACE.
F.F. INDICATES FAR FACE.

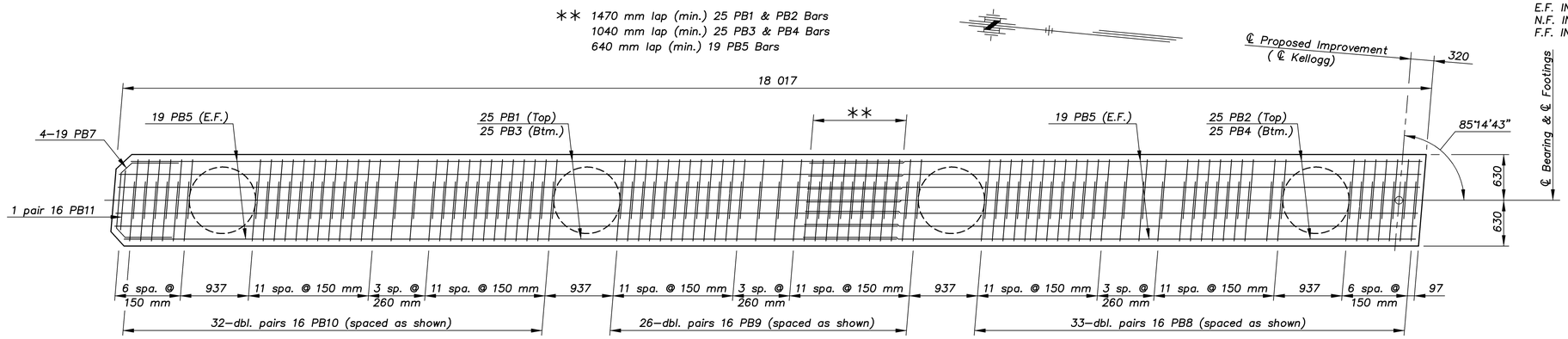

PLAN VIEW OF PIER BEAM REINFORCEMENT

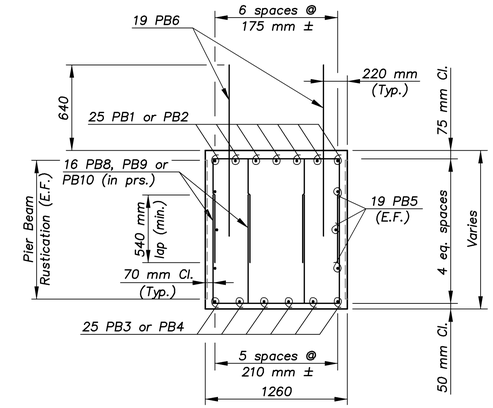

TYPICAL SECTION THRU BEAM

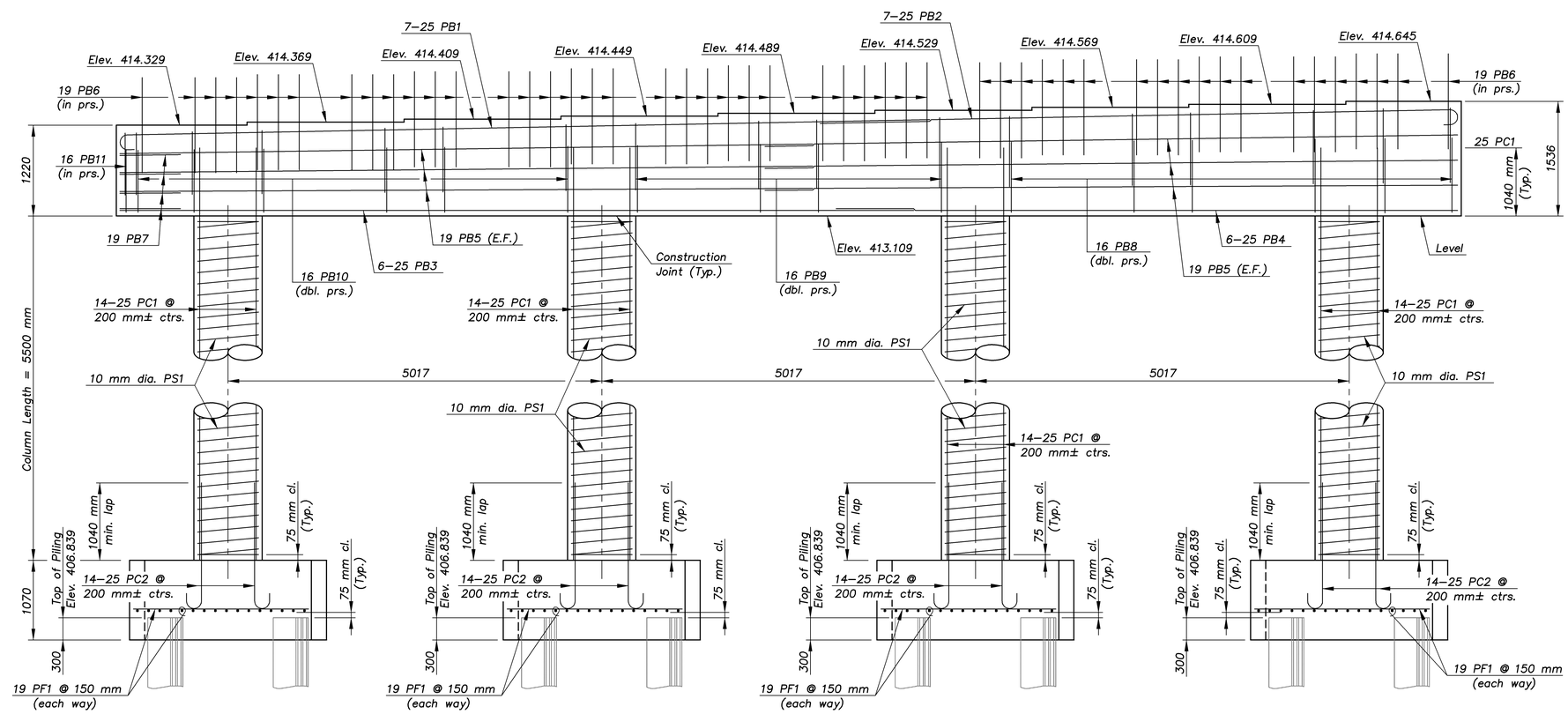

ELEVATION VIEW OF PIER

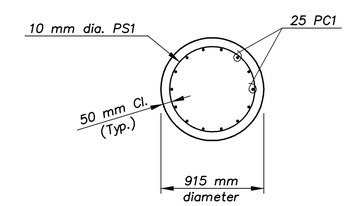

TYPICAL SECTION THRU COLUMN

1:100

ARMOUR/PIER

KANSAS DEPARTMENT OF TRANSPORTATION

BR. NO. 54–87–30.81(700) W.B. STA. 3+378.725

PIER DETAILS

KELLOGG AVENUE OVER ARMOUR ROAD

Proj. No. 54–87 K–8258–01 SEDGWICK COUNTY

CFS

Cook, Flatt & Strobel
ENGINEERS, P.A.

DESIGNED	R.S.C.	SCALE	Varies
DETAILED	T.R.G.	DATE	
QUANTITIES	T.R.G.	SHEET	14 OF 39