E.F. INDICATES EACH FACE.
N.F. INDICATES NEAR FACE.
F.F. INDICATES FAR FACE.

STATE	PROJECT NO.	YEAR	SHEET NO.	TOTAL SHEETS
KANSAS	54–87 K–8258–01	2007	207	556

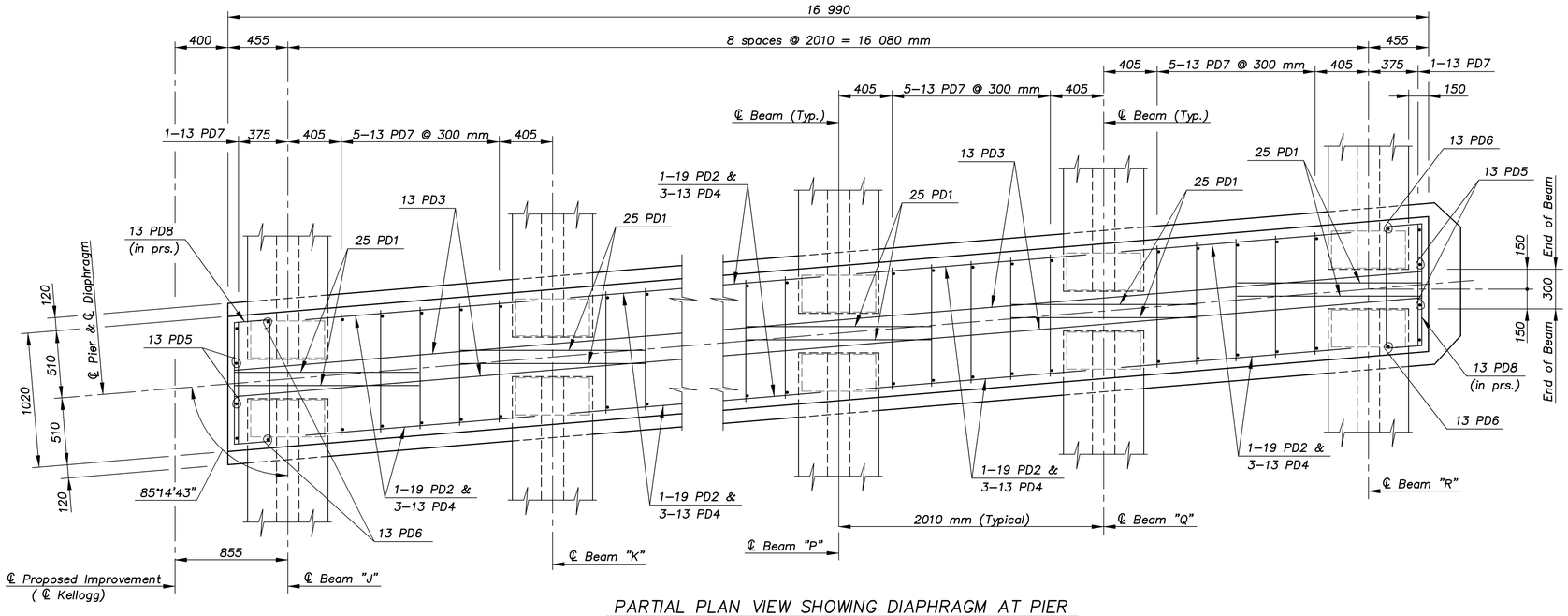

PARTIAL PLAN VIEW SHOWING DIAPHRAGM AT PIER

(Looking Ahead Station)

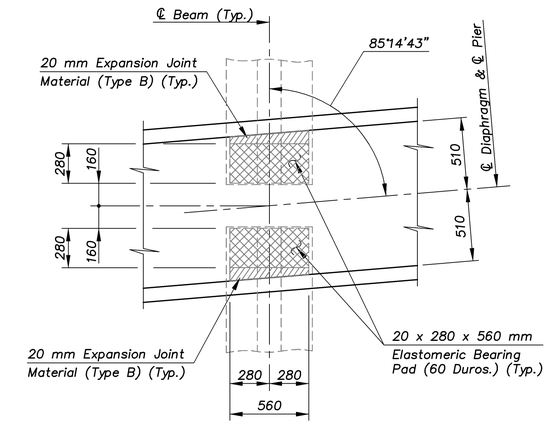

TYPICAL BEARING PAD LAYOUT

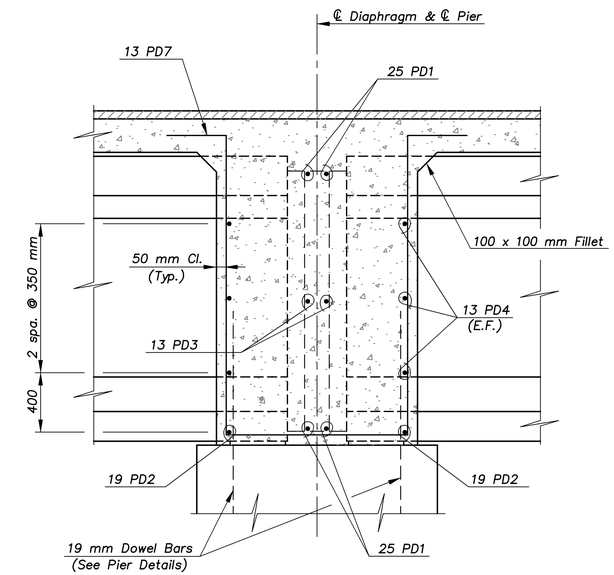

TYPICAL SECTION THRU DIAPHRAGM

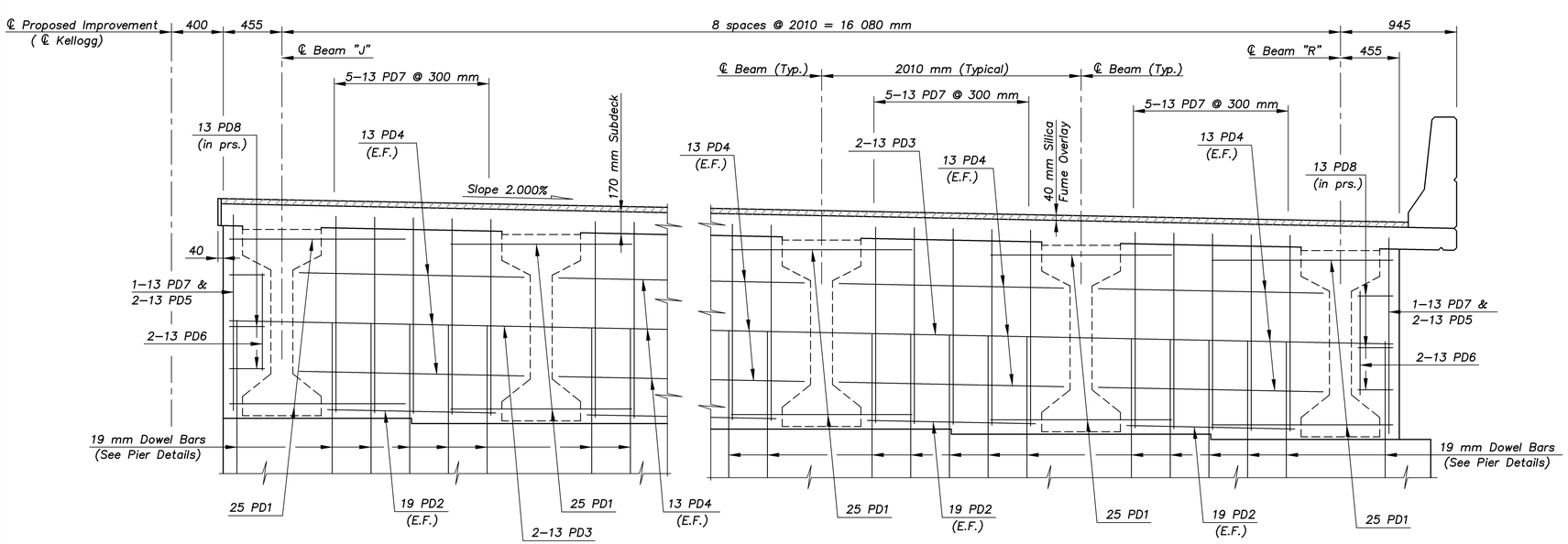

PARTIAL ELEVATION SHOWING DIAPHRAGM AT PIER

(Normal to ℄ Project)

ARMOUR/DIAPHRAGMS 1:100

KANSAS DEPARTMENT OF TRANSPORTATION

BR. NO. 54–87–30.82(701) E.B. STA. 3+378.725

PIER DIAPHRAGM DETAILS

KELLOGG AVENUE OVER ARMOUR ROAD

Proj. No. 54–87 K–8258–01 SEDGWICK COUNTY

CFS

Cook, Flatt & Strobel
ENGINEERS, P.A.

DESIGNED	R.S.C.	SCALE	Varies
DETAILED	T.R.G.	DATE	
QUANTITIES	T.R.G.	SHEET	27 OF 39