STATE	PROJECT NO.	YEAR	SHEET NO.	TOTAL SHEETS
KANSAS	54-87 K-8258-01	2007	377	556

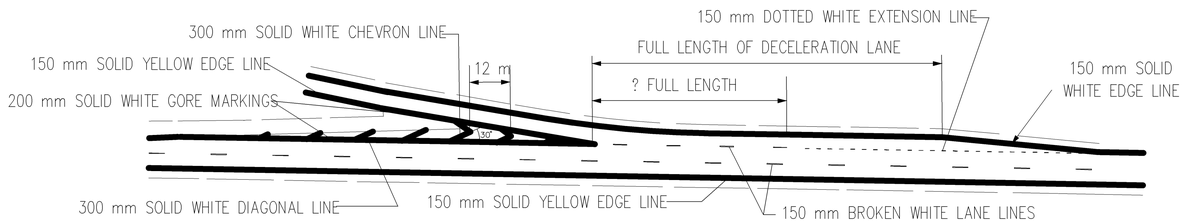

TYPICAL DECELERATION EXIT RAMP

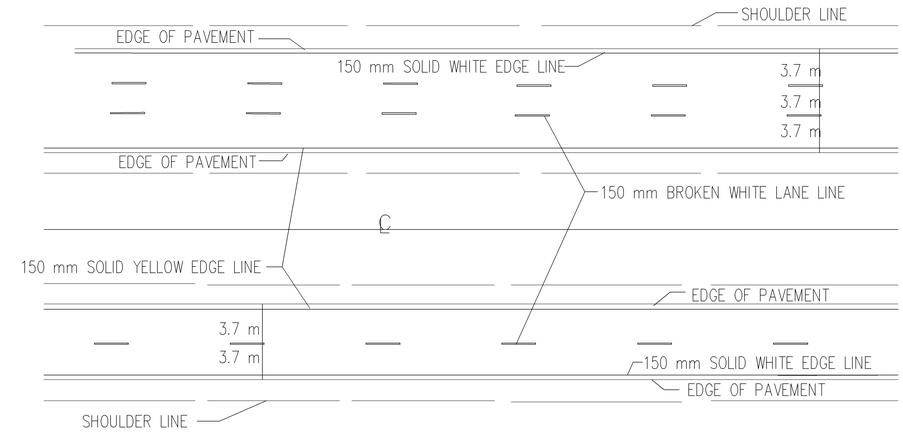

TYPICAL LANE LINE AND EDGE LINE MARKINGS
FOR FOUR LANE AND SIX LANE DIVIDED HIGHWAYS

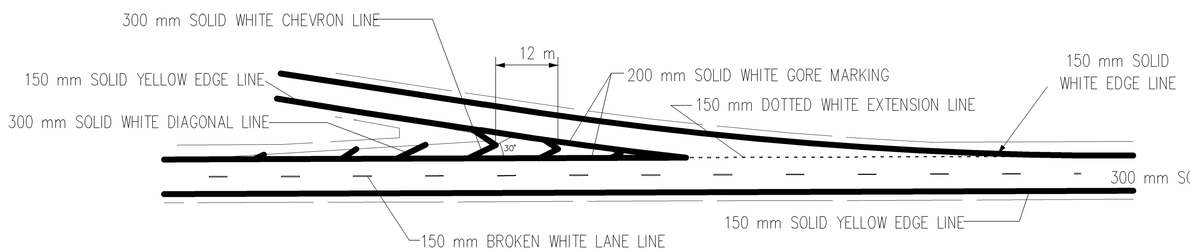

TYPICAL TAPERED EXIT RAMP

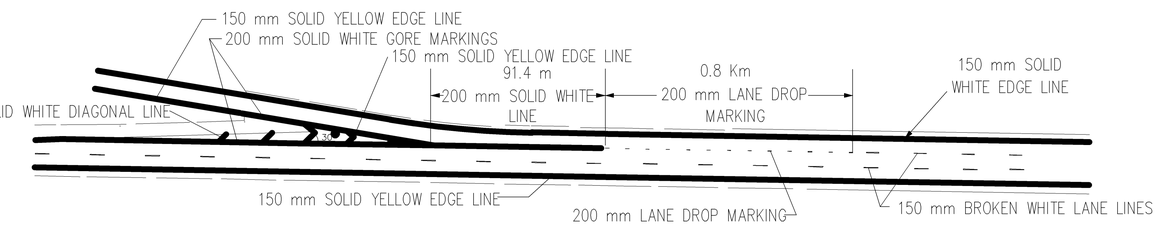

TYPICAL LANE DROP

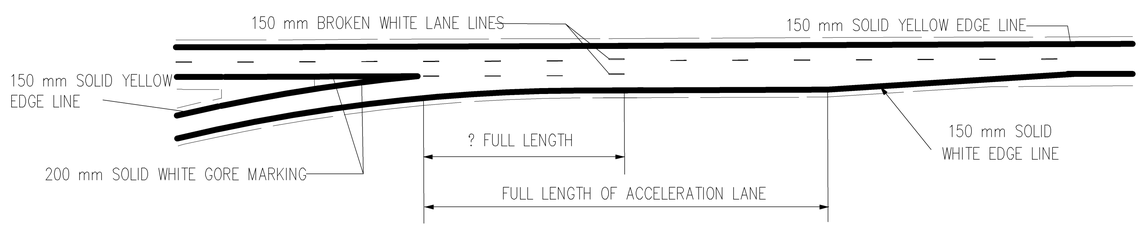

TYPICAL ACCELERATION RAMP

TYPICAL SPACING
FOR DOTTED EXTENSION
LINES, UNLESS OTHERWISE
NOTED ON PLANS.

TYPICAL SPACING
FOR BROKEN LINES
UNLESS OTHERWISE
NOTED ON PLANS.

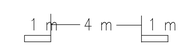

TYPICAL SPACING
FOR LANE DROP.
UNLESS OTHERWISE
NOTED ON PLANS.

NOTE:
LONGITUDINAL PAVEMENT MARKING LINES SHALL BE OFFSET A MINIMUM OF 50 mm FROM LONGITUDINAL PAVEMENT JOINTS.

NOTE:
AT RAMP TERMINALS WITH CROSS-ROADS, WRAP 150 mm EDGE LINES AROUND RADII.

NOTE:
ON NON I, US, AND K ROUTES, 100 mm EDGE LINES MAY BE INSTALLED. 150 mm EDGE LINES ARE NOT REQUIRED ON NON I, US, AND K ROUTES.

NO.	DATE	REVISION	BY	APP'D
3				
2				
1	07/26/2005	New FHWA Approval Date	JFF	BDG

KANSAS DEPARTMENT OF TRANSPORTATION
TYPICAL PAVEMENT
MARKING DETAILS FOR
MULTI-LANE DIVIDED
ROADWAYS

TE307SI

FHWA APPROVAL		07/26/2005		APP'D	Brian D. Gower		
DESIGNED	JFF	DETAILED	JFF	QUANTITIES		TRACED	
DESIGN CK.	BDG	DETAIL CK.	BDG	QUAN. CK.		TRACE CK.	

Plotted By : $$USERNAME$$ $$$KDOTGRP$$$$$6th Floor
Plot File : $$$$$$$$$$$$DGNSPEC$$$$$$$$$$$$$$$$
Plot Date : $$$$$$SYTIME$$$$$$

J:\00011PH2 FINAL\SIGNING & MARKING\te307six.dwg 9/1/2006 11:53:58 AM CST