STATE	PROJECT NO.	YEAR	SHEET NO.	TOTAL SHEETS
KANSAS	54-87 K-8258-01	2007	386	556

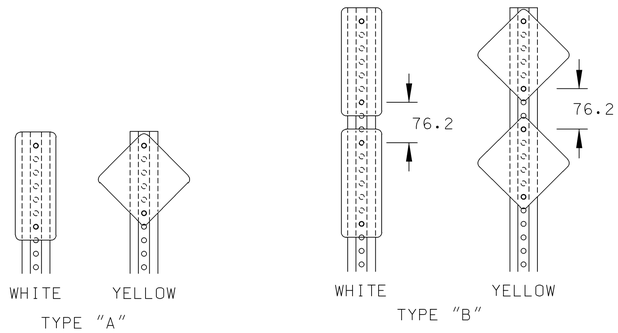

TYPICAL DELINEATOR ASSEMBLY POSITIONS
FOR STEEL POST MOUNTING

FLAT SHEET DELINEATORS:
See flat sheet sign blank detail sheets for the required aluminum alloys and thickness.

The 75mm x 200mm delineator sign face shall be covered with high performance white retroreflective sheeting. The 125mm x 125mm delineator sign face shall be covered with high performance yellow retroreflective sheeting.

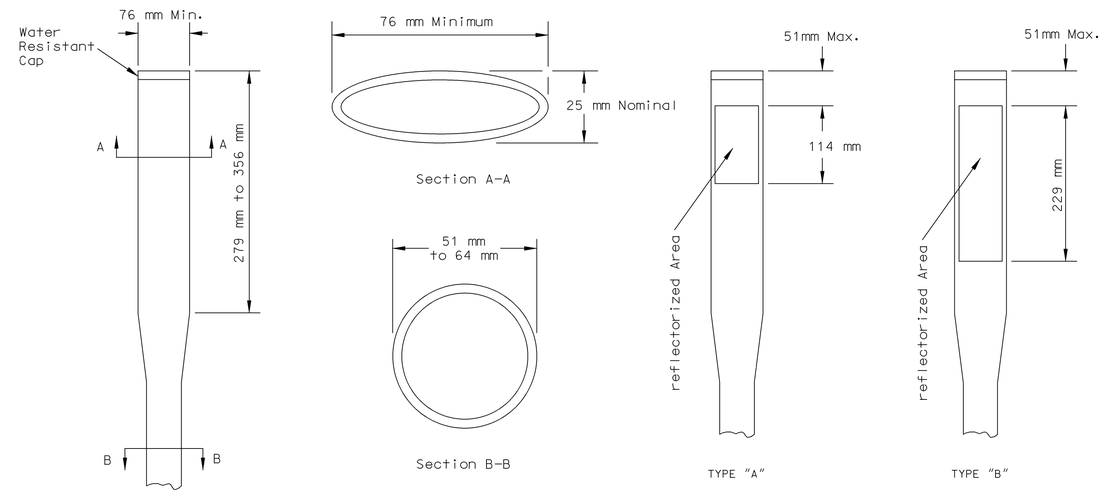

FLEXIBLE DELINEATOR POST DETAILS

TYPICAL REFLECTORIZED AREA POSITIONING
FOR FLEXIBLE POST MOUNTING

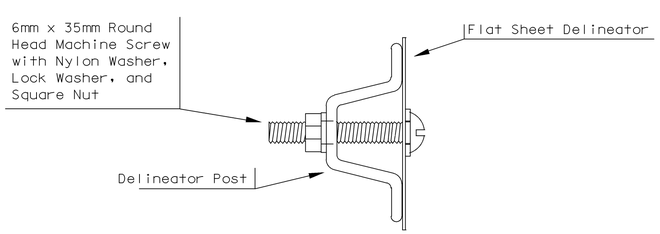

FLAT SHEET DELINEATOR MOUNTING

DETAILS FOR ATTACHING DELINEATORS
TO STEEL DELINEATOR POSTS

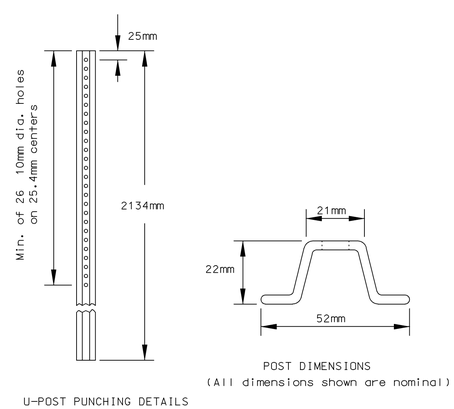

U-POST PUNCHING DETAILS

POST DIMENSIONS
(All dimensions shown are nominal)

STEEL DELINEATOR POST DETAILS

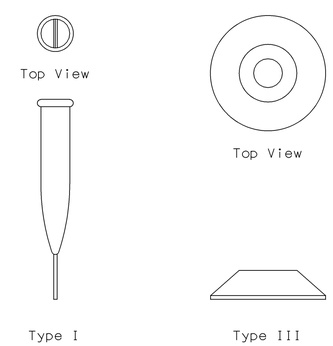

ANCHORING DEVICES
FOR FLEXIBLE DELINEATORS

FLEXIBLE DELINEATOR POSTS AND ANCHORING DEVICES:
The total length of the flexible post shall be determined by the Contractor, as per location and anchoring device.

REFLECTORIZATION:
The reflectorized area shall be high performance retroreflective sheeting, either white or yellow. The reflectorized area shall be 76mm minimum in width.

DELINEATION NOTE:
See the "Design Details for Positioning of Delineators' and/or plan sheets for the delineation spacing, type, and color.

NO.	DATE	REVISIONS	BY	APP'D
3				
2				
1				

KANSAS DEPARTMENT OF TRANSPORTATION

DELINEATOR DESIGN DETAILS
STEEL POST MOUNT &
FLEXIBLE POST MOUNT

TE412si 07-01-03

FHWA APPROVAL 07-22-2003		APP'D Steven A. Buckley	
DESIGNED DDG	DETAILED WSB	QUANTITIES	TRACED
DESIGN CK. SAB	DETAIL CK. DDG	QUAN. CK.	TRACE CK.

Plotted By : 00USERNAME00 Thacher Bldg., 4th Floor
Plot File : 0000000000DGNSPEC0000000000000
Plot Date : 00000STIME000000