STATE	PROJECT NO.	YEAR	SHEET NO.	TOTAL SHEETS
KANSAS	54-87 K-8258-01	2007	454	556

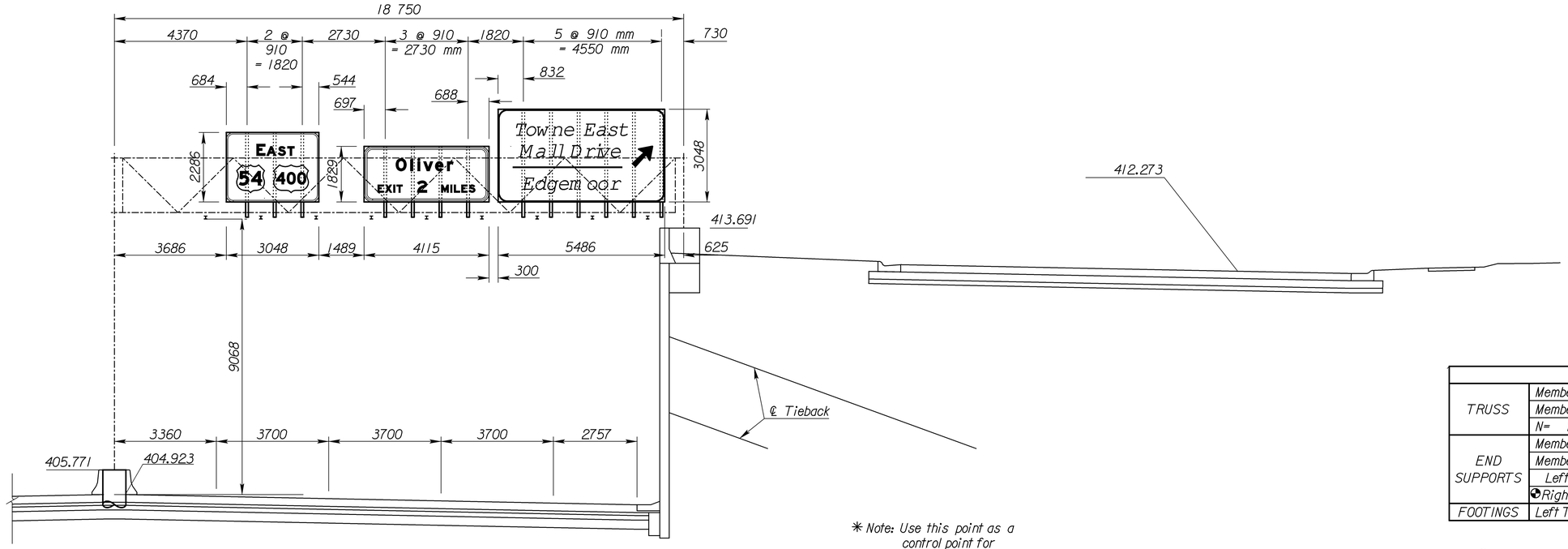

ELEVATION

✳ Note: Use this point as a control point for all elevations.

ALUMINUM DETAILS					
TRUSS	Member 1 Wall Thickness				6.35
	Member 2 Wall Thickness				5.74
	N= 10	X = 275	S = 1820		Camber = 25
END SUPPORTS	Member 1 Wall Thickness				9.27
	Member 2 Wall Thickness				6.02
	Left	N = 5	S = 1720	L =	11 020
	✪Right	N = -	S = ----	L =	✪3080
FOOTINGS	Left Type F		Right Type SPECIAL		

✪See "Aluminum Alternate Special End Support Detail" sheet.

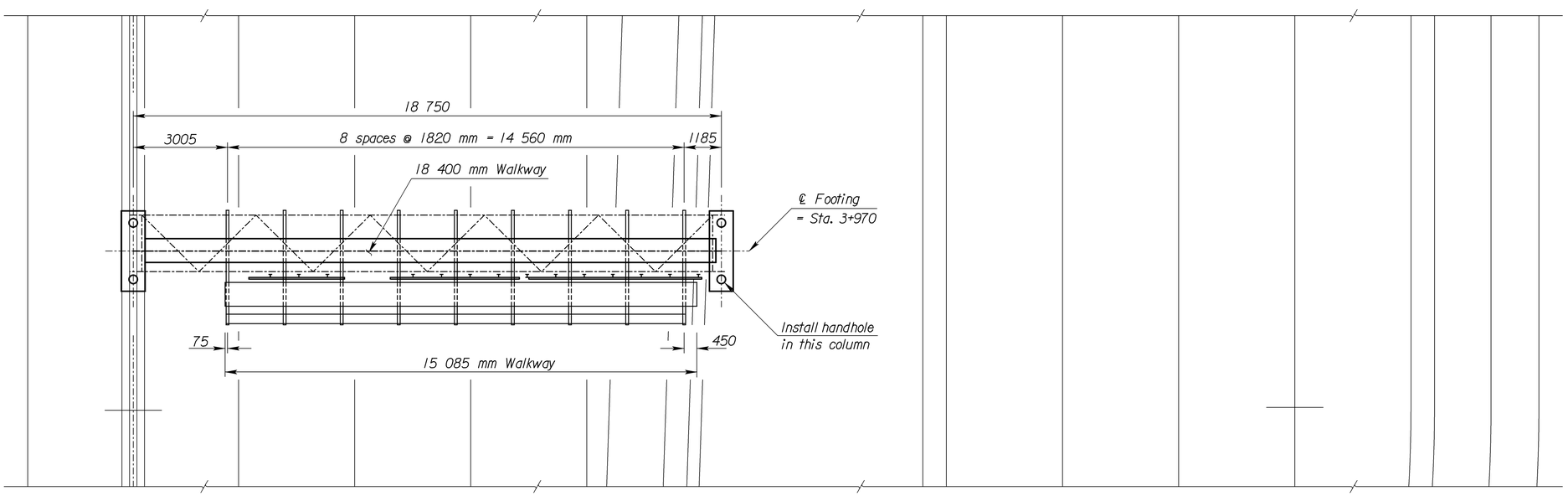

PLAN

Scale 1:75

NO.	DATE	REVISIONS	BY	APP'D
3				
2				
1				

KANSAS DEPARTMENT OF TRANSPORTATION

W.B. US-54 STATION 3+970

SPAN TYPE OVERHEAD SIGN STRUCTURE
CONSTRUCTION LAYOUT
ALUMINUM ALTERNATE

PROJ. NO. 54-87 K-8258-01 SEDGWICK CO.

SHEET NO.	OF	SCALE		APP'D			
DESIGNED	CEM	DETAILED	CEM	QUANTITIES		CADD	CEM
DESIGN CK.		DETAIL CK.		QUAN. CK.		CADD CK.	

Plotted By: $$USERNAME$$ Plot Location: $UNIT$
File: $$$$$$$$$$$$$$DGNSPEC$$$$$$$$$$$$$$
Plot Date: $$$$$$SYTIME$$$$$$