STATE	PROJECT NO.	YEAR	SHEET NO.	TOTAL SHEETS
KANSAS	54-87 K-8258-01	2007	460	556

Note: Always start (2) diagonal from top of end support as shown.

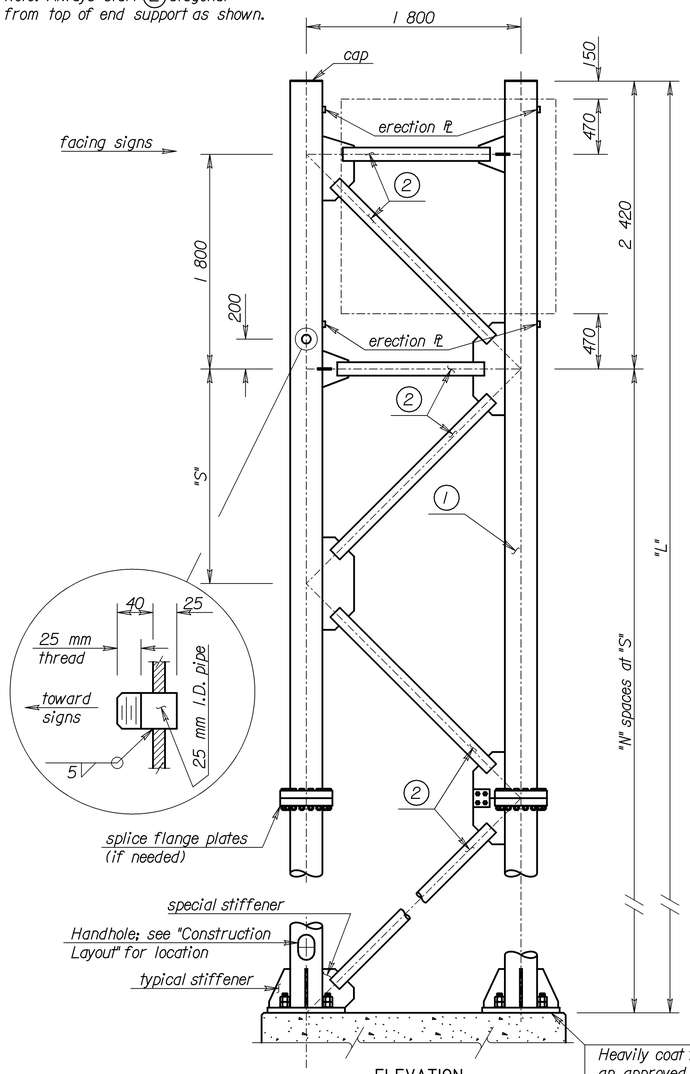

ELEVATION

Heavily coat the bottom of the end supports with an approved insulating material to provide complete insulation between the aluminum and the concrete.

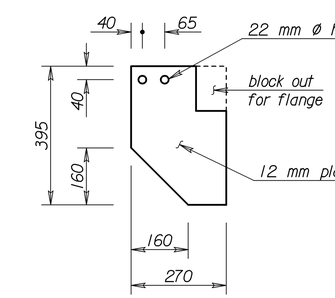

HALF J3 ℄

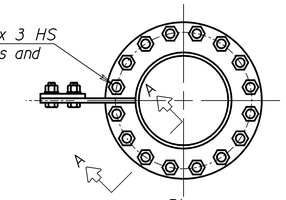

Plan

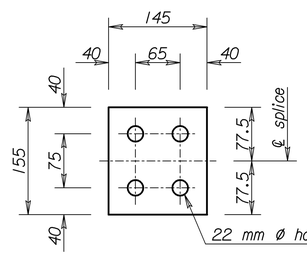

SPLICE PLATE DETAILS
(12 mm ℄)

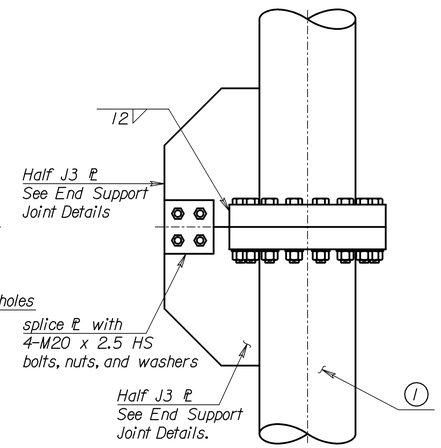

Elevation

END SUPPORT SPLICE DETAIL
(Optional)

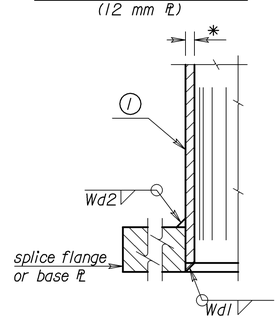

Section A-A
Make Wd1 depth equal to pipe wall thickness, build out to obtain full throat.

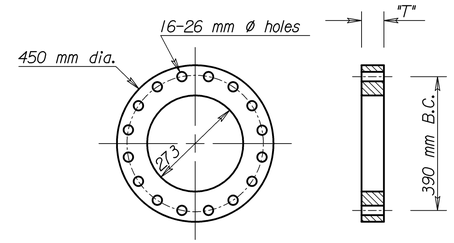

SPLICE FLANGE PLATE

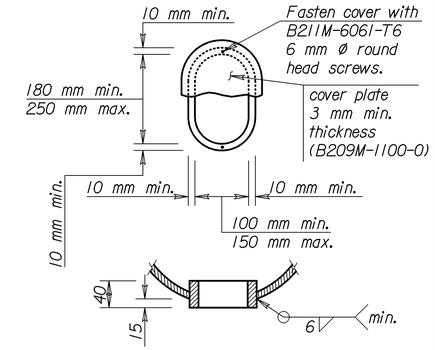

HANDHOLE DETAIL

Note: Use a handhole frame bar whose net area is at least 60 percent of the pole section removed. Maintain the pole section properties at the handhole. Build the frame from a bar conforming to ASTM B209M-6061-T6 or a casting conforming to ASTM B26-356-T6.

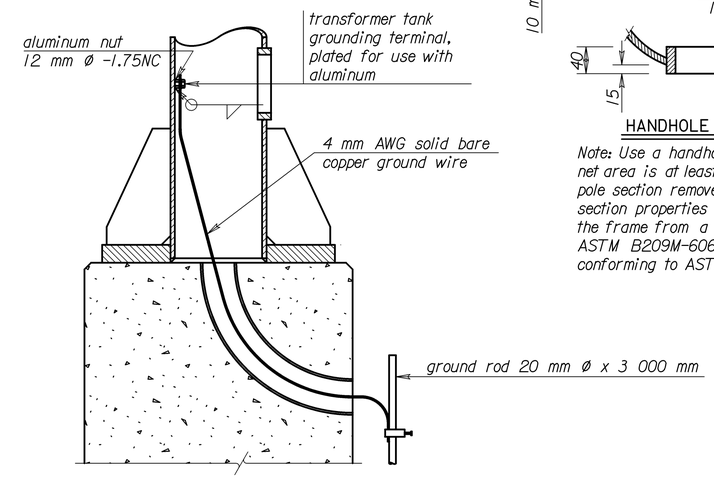

GROUNDING DETAILS

Member (1) is 273 mm O.D. pipe.

Member (2) is 114 mm O.D. pipe.

Member (1) * wall thickness	Fillet Weld size Wd2	Anchor Bolt "d"	Base ℄ "t"	Splice ℄ "T"
4.19	6	30	30	40
7.80	10	36	45	50
9.27	11	42		55
12.7	14	48	50	65
15.1	16	56	60	70
18.2	20	56	70	80

* See "Construction Layout" for wall thickness, "N", "S", and "L".

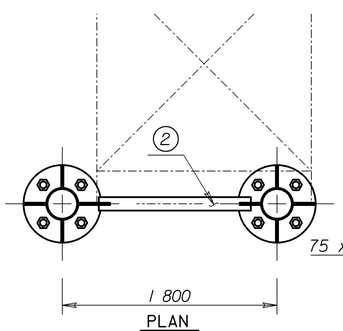

PLAN

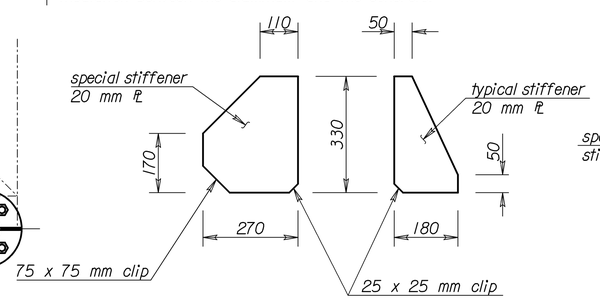

Stiffener Details

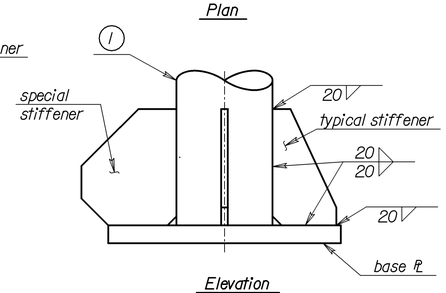

Elevation

END SUPPORT BASE DETAIL

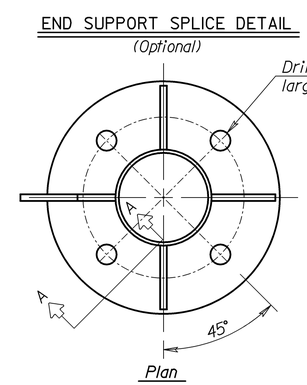

Plan

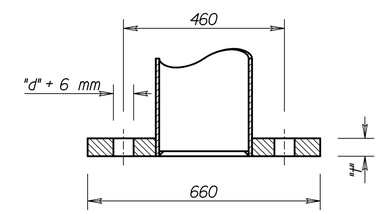

Section

NO.	DATE	REVISIONS	BY	APP'D

KANSAS DEPARTMENT OF TRANSPORTATION

STANDARD STRUCTURAL SIGN SUPPORTS
SPAN TYPE OVERHEAD
ALUMINUM ALTERNATE
END SUPPORT FRAMING PLAN AND SPLICE DETAILS
SL151B-01 S1

FHWA APPROVAL		4-10-97	APP'D		Kenneth F. Hurst
DESIGNED	BFM	DETAILED	DDP	QUANTITIES	CADD DJE
DESIGN CK.	RDH	DETAIL CK.	RDH	QUAN.CK.	CADD CK. LES

Std.Base File: sl151bsi.dgn - Plot 1
Plotted By: $$USERNAME$$ | Plot Location: $UNIT$
File: $$$$$$$$$$$$DGNSPEC$$$$$$$$$$$$$$
Plot Date: $$$$$SYTIME$$$$$