STATE	PROJECT NO.	YEAR	SHEET NO.	TOTAL SHEETS
KANSAS	54-87 K-8258-01	2007	471	556

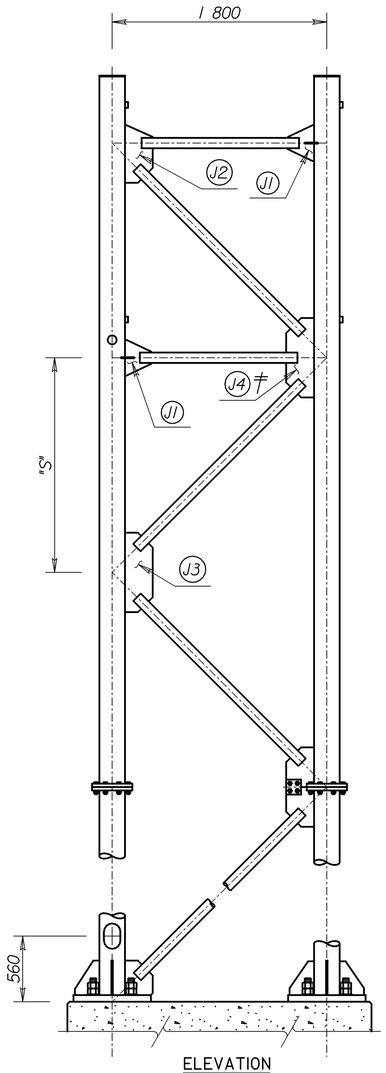

ELEVATION

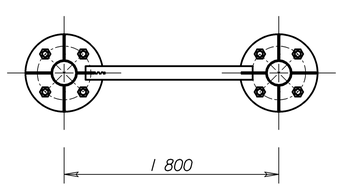

PLAN

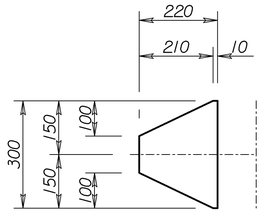

PLATE J1A
(10 mm ℞)

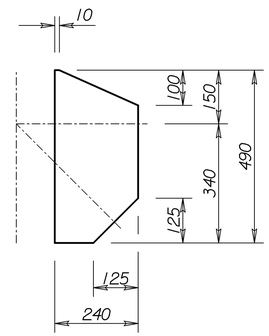

PLATE J2
(10 mm ℞)

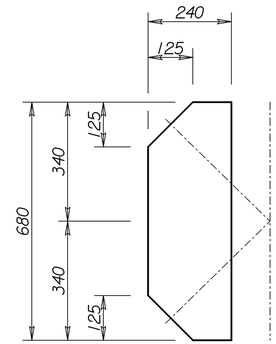

PLATE J3
(10 mm ℞)

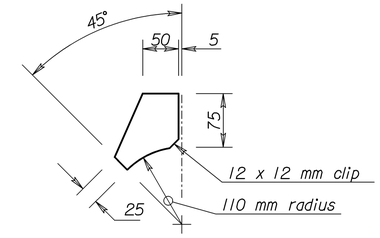

PLATE J1B
(10 mm ℞)

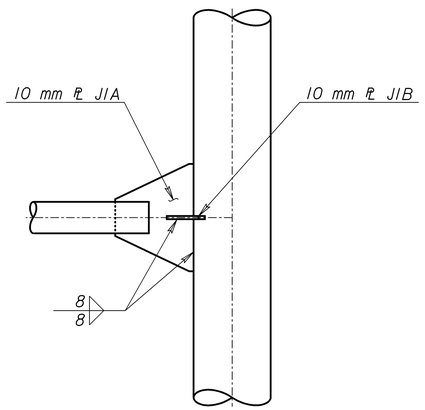

Elevation

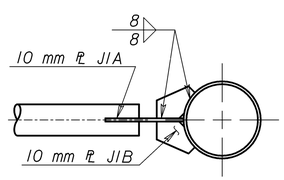

Section

DETAILS JOINT J1

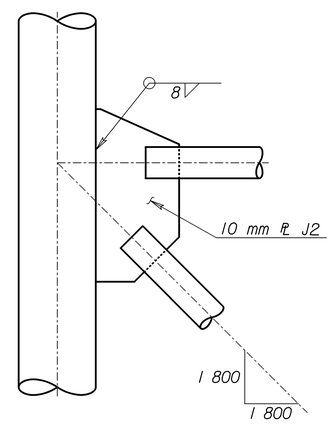

Elevation

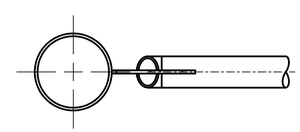

Section

DETAILS JOINT J2

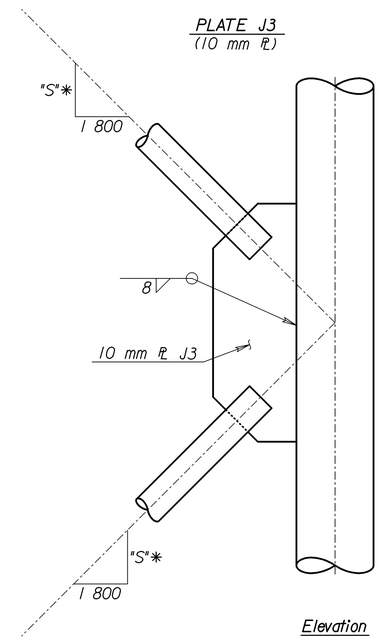

Elevation

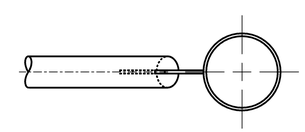

Section

DETAILS JOINT J3

‡ Note: Joint J4 is identical to J3 except J4 has an additional member (See End Support Elevation).

Member ② * wall thickness	Fillet Weld size Wd3
3.18	5
5.49	6
7.62	8

* See "Construction Layout" for wall thickness and "S"

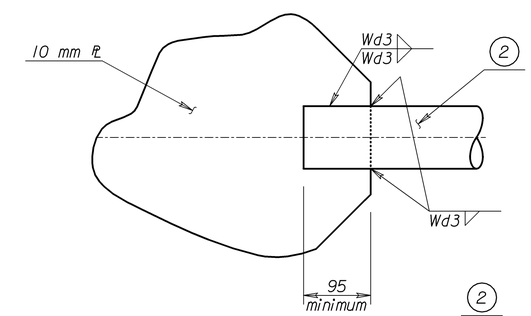

TYPICAL WELDED JOINT

NO.	DATE	REVISIONS	BY	APP'D

KANSAS DEPARTMENT OF TRANSPORTATION

STANDARD STRUCTURAL SIGN SUPPORTS
SPAN TYPE OVERHEAD
STEEL ALTERNATE
END SUPPORT JOINT DETAILS

SL15IC-02 SI

FHWA APPROVAL			4-10-97	APP'D		Kenneth F. Hurst	
DESIGNED	BFM	DETAILED	KFH	QUANTITIES		CADD	DJE
DESIGN CK.	RDH	DETAIL CK.	RDH	QUAN.CK.		CADD CK.	LES

Std. Base File: sl15lcsi.dgn - Plot 2
Plotted By: $$USERNAME$$ | Plot Location: $UNIT$
File: $$$$$$$$$$$$DGNSPEC$$$$$$$$$$$$
Plot Date: $$$$$SYTIME$$$$$