STATE	PROJECT NO.	YEAR	SHEET NO.	TOTAL SHEETS
KANSAS	54-87 K-8258-01	2007	472	556

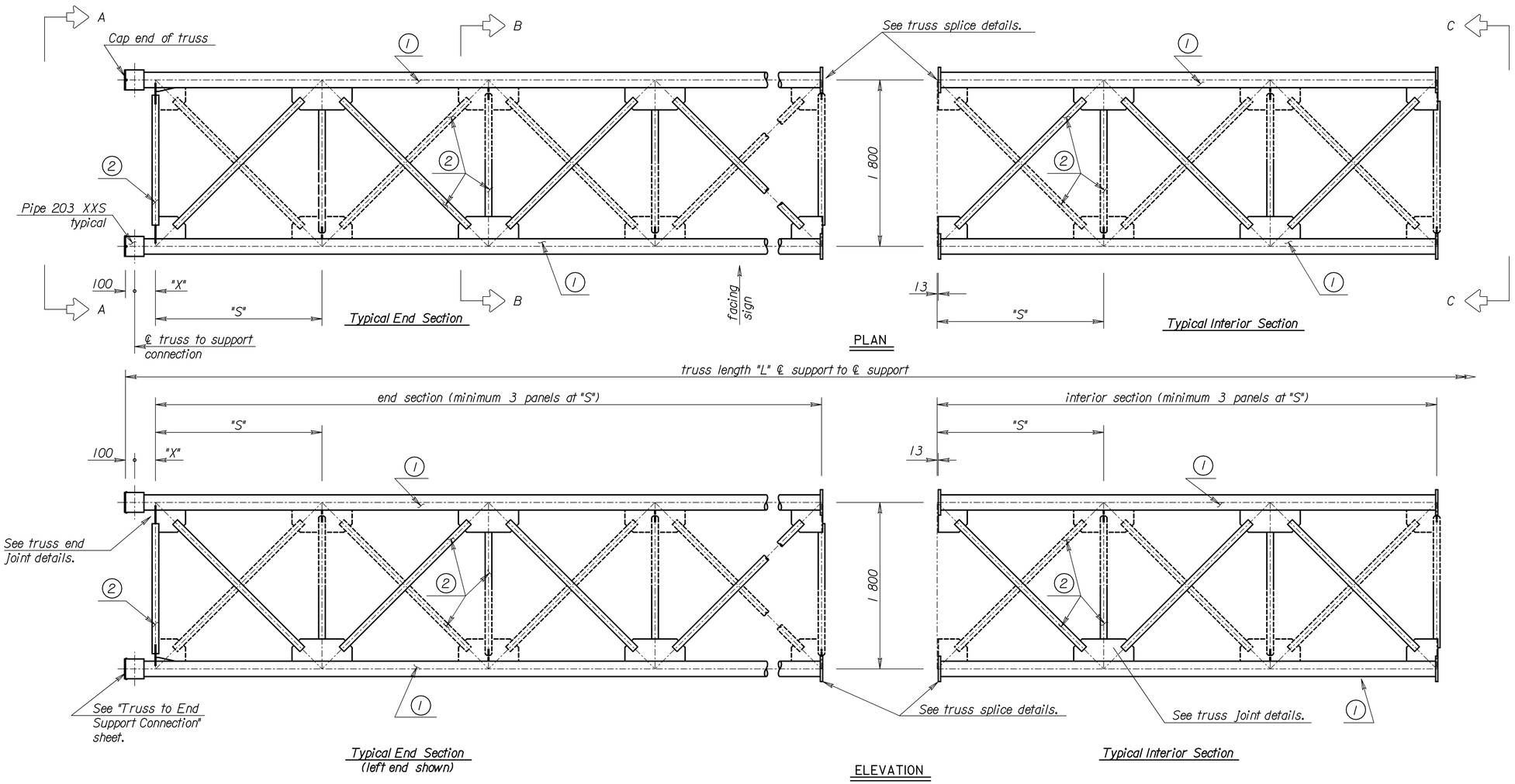

Note: Dashed lines used in plan and elevation views to distinguish bottom or rear portions of member (2).

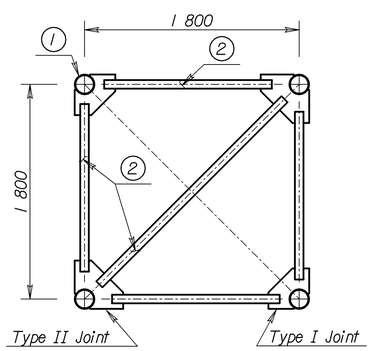

SECTION A-A
See truss end joint details.

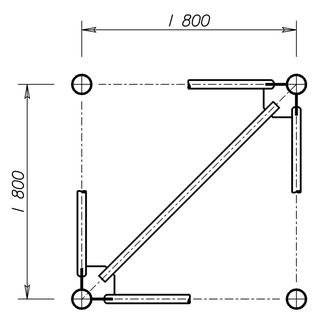

SECTION B-B
See truss joint details.

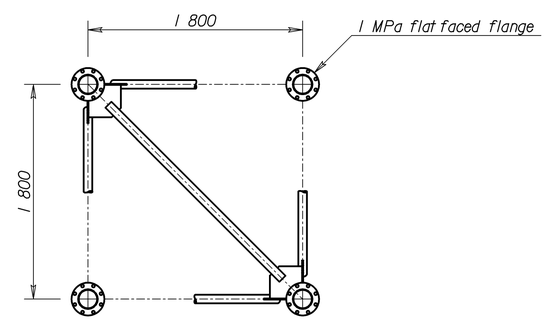

SECTION C-C
See truss splice details.

Note: See "Construction Layout" for wall thickness, "N","S","L" and "X" dimensions.

Member (1) is 168 mm O.D. pipe.

Member (2) is 73 mm O.D. pipe.

NO.	DATE	REVISIONS	BY	APP'D

KANSAS DEPARTMENT OF TRANSPORTATION

STANDARD STRUCTURAL SIGN SUPPORTS
SPAN TYPE OVERHEAD
STEEL ALTERNATE
TRUSS FRAMING PLAN AND DETAILS
SL15IC-03 SI

FHWA APPROVAL		4-10-97	APP'D	Kenneth F. Hurst	
DESIGNED	BFM	DETAILED	KFH	QUANTITIES	CADD DJE
DESIGN CK.	RDH	DETAIL CK.	RDH	QUAN.CK.	CADD CK. LES

Std.Base File: sl15lcsi.dgn - Plot 3
Plotted By: $$USERNAME$$ Plot Location: $UNIT$
File: $$$$$$$$$$$$DGNSPEC$$$$$$$$$$$$$$
Plot Date: $$$$$$SYTIME$$$$$$