| STATE | PROJECT NO. | YEAR | SHEET NO. | TOTAL SHEETS |
|---|---|---|---|---|
| KANSAS | 54-87 K-8258-01 | 2007 | 479 | 556 |

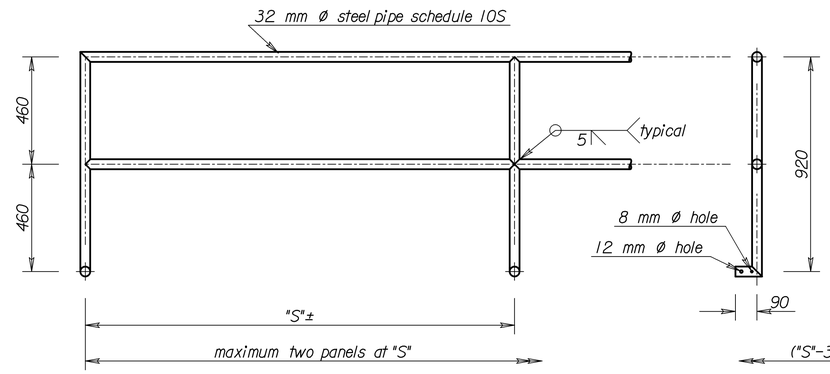


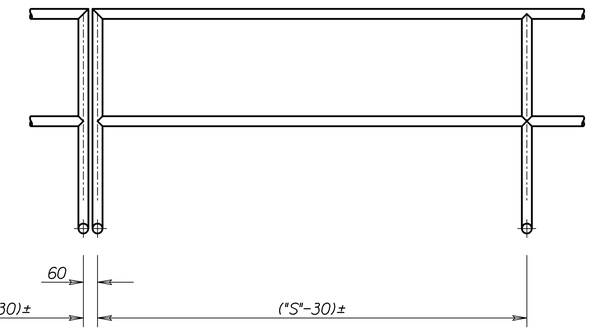


STEEL HANDRAIL

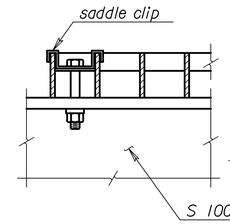


Section A-A

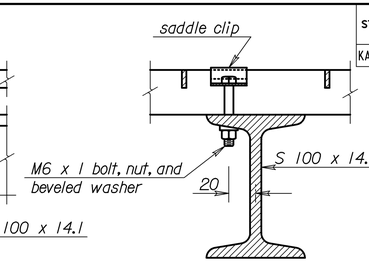


Section B-B

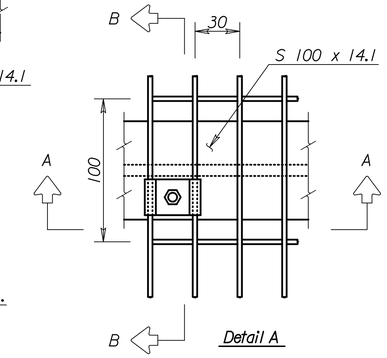


Detail A

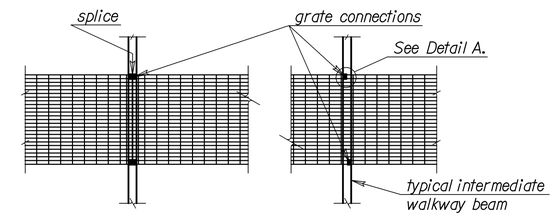


Plan

EXTERIOR GRATE CONNECTION DETAILS

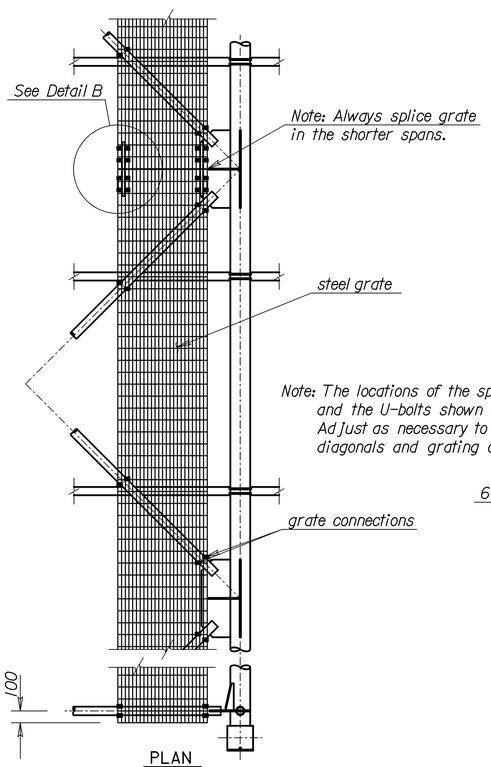


PLAN

(Only lower truss members shown)

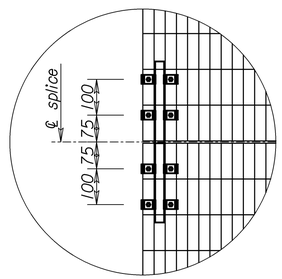


Detail B

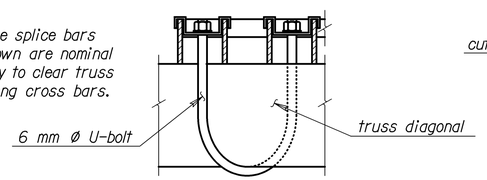


Elevation

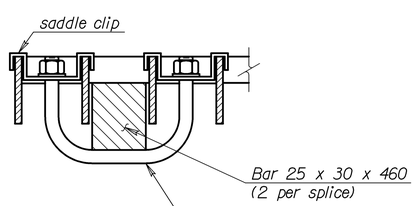


Splice Detail

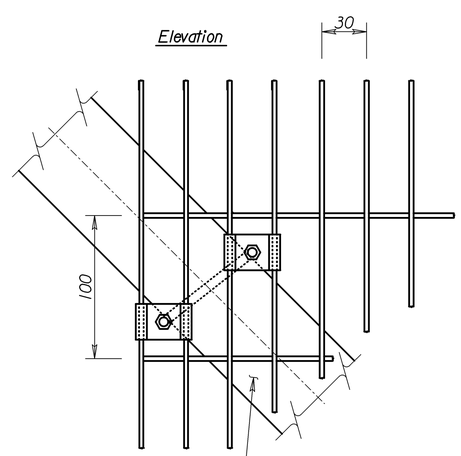


Plan

INTERIOR GRATE CONNECTION DETAILS

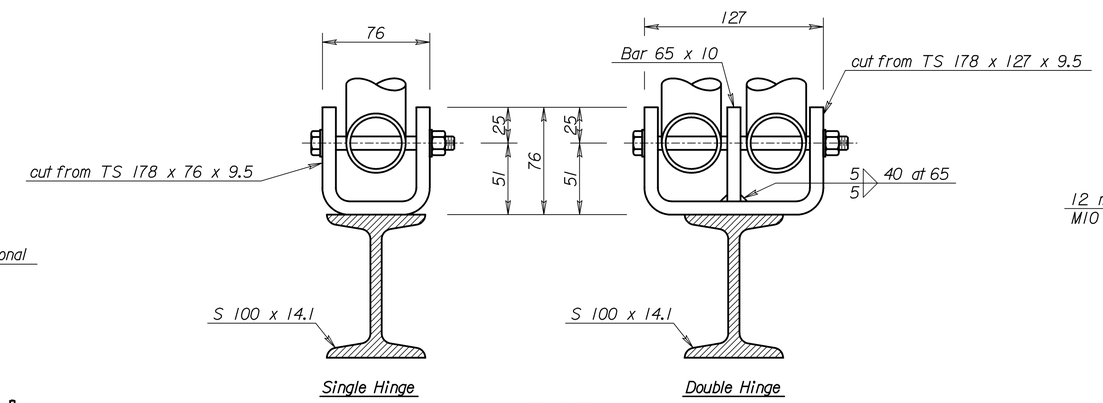


Single Hinge

Double Hinge

End Views

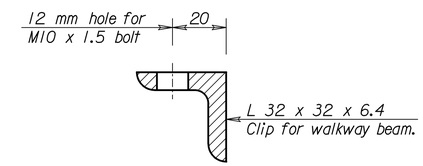


LIGHTING FIXTURE MOUNTING ANGLE

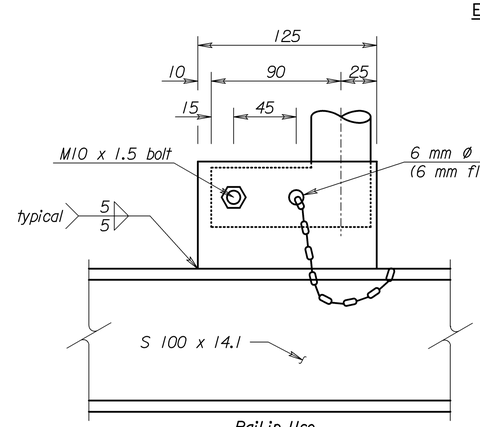


Rail in Use

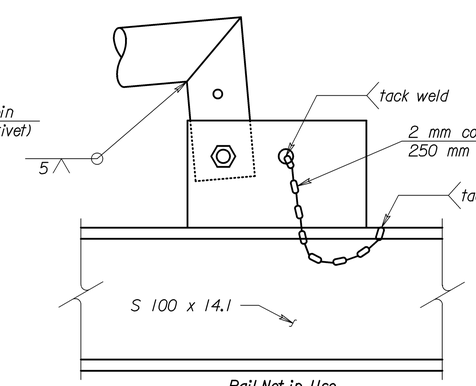


Rail Not in Use

HANDRAIL CONNECTIONS

| NO. | DATE | REVISIONS | BY | APP'D |
|---|---|---|---|---|
| | | | | |
| | | | | |
| | | | | |

KANSAS DEPARTMENT OF TRANSPORTATION

STANDARD STRUCTURAL SIGN SUPPORTS
SPAN TYPE OVERHEAD
STEEL ALTERNATE
SIGN MOUNTING AND WALKWAY DETAILS

SL15IC-10 SI

| | | | | | | | |
|---|---|---|---|---|---|---|---|
| FHWA APPROVAL | | | 4-10-97 | APP'D | | Kenneth F. Hurst | |
| DESIGNED | BFM | DETAILED | JD/RD | QUANTITIES | | CADD | DJE |
| DESIGN CK. | KFH | DETAIL CK. | KFH | QUAN.CK. | | CADD CK. | LES |

Std.Base File: sl15icsi.dgn - Plot 10
Plotted By: $$USERNAME$$ Plot Location: $UNIT$
File: $$$$$$$$$$$$DGNSPEC$$$$$$$$$$$$$$
Plot Date: $$$$$$STIME$$$$$$