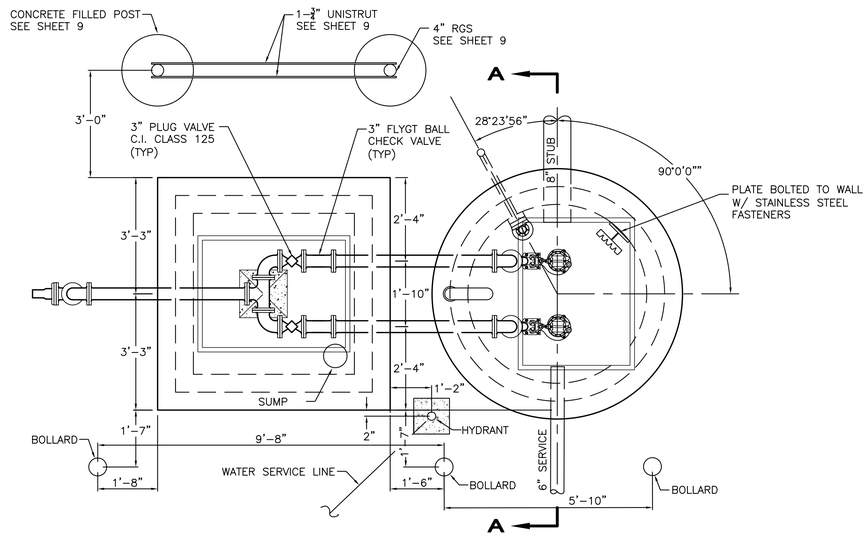


## PLAN VIEW

REINFORCING NOT SHOWN FOR CLARITY.
(SEE DETAILS 1 AND 2 FOR REINFORCING)

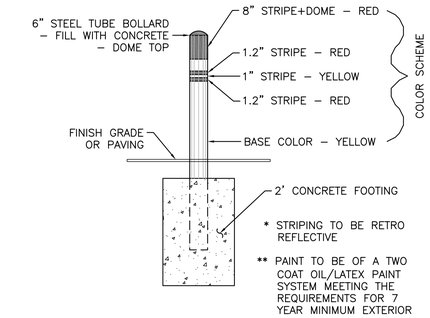


## BOLLARD

NO SCALE

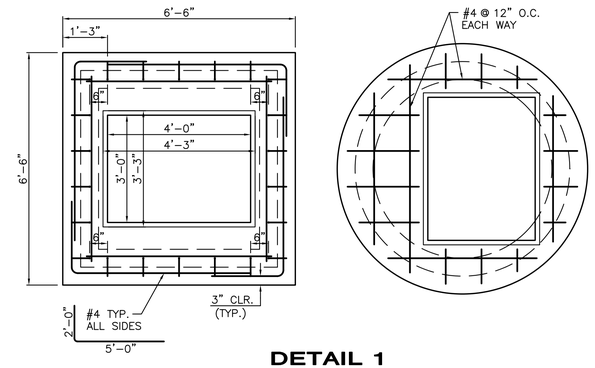


## DETAIL 1

PLAN – TOP REINFORCING

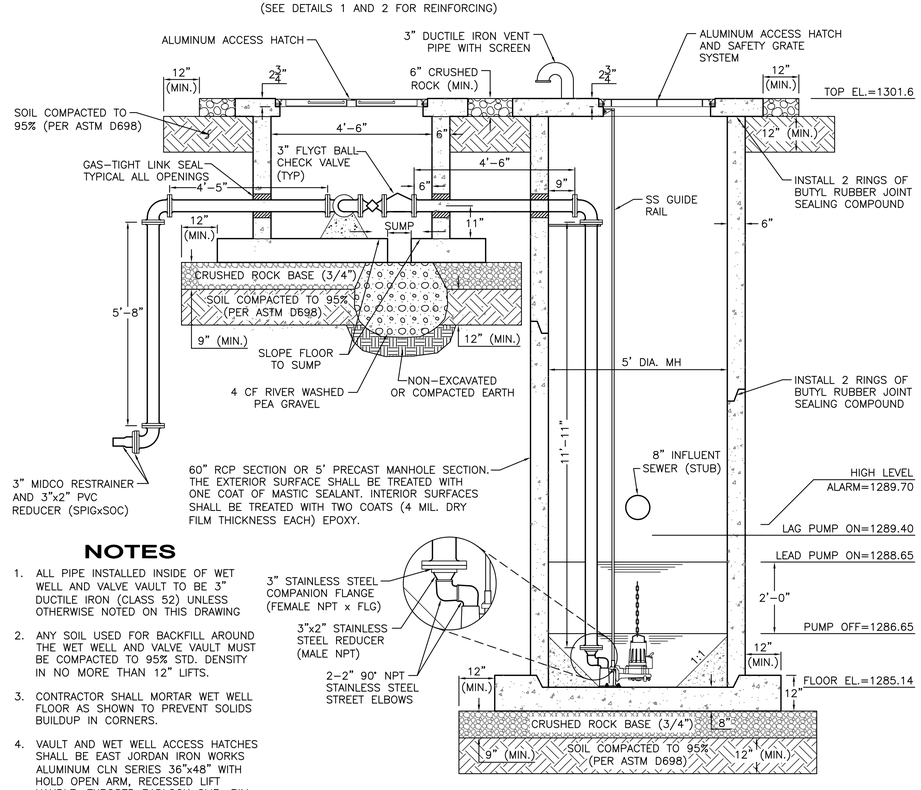


## ELEVATION

LOOKING WEST
REINFORCING NOT SHOWN FOR CLARITY.
(SEE DETAILS 1 AND 2 FOR REINFORCING)

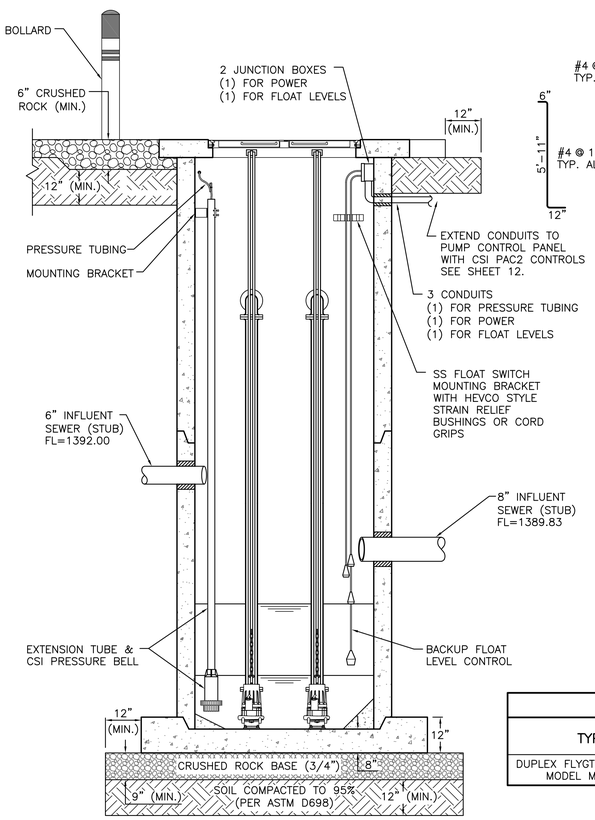


## SECTION A-A

ELEVATION – LOOKING SOUTH
REINFORCING NOT SHOWN FOR CLARITY.
(SEE DETAILS 1 AND 2 FOR REINFORCING)

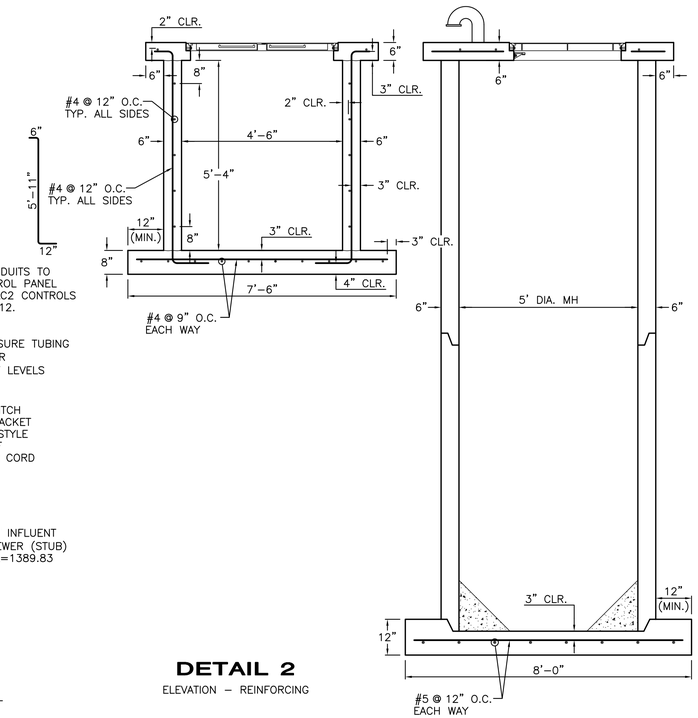


## DETAIL 2

ELEVATION – REINFORCING

## NOTES

1. ALL PIPE INSTALLED INSIDE OF WET WELL AND VALVE VAULT TO BE 3" DUCTILE IRON (CLASS 52) UNLESS OTHERWISE NOTED ON THIS DRAWING
2. ANY SOIL USED FOR BACKFILL AROUND THE WET WELL AND VALVE VAULT MUST BE COMPACTED TO 95% STD. DENSITY IN NO MORE THAN 12" LIFTS.
3. CONTRACTOR SHALL MORTAR WET WELL FLOOR AS SHOWN TO PREVENT SOLIDS BUILDUP IN CORNERS.
4. VAULT AND WET WELL ACCESS HATCHES SHALL BE EAST JORDAN IRON WORKS ALUMINUM CLN SERIES 36"x48" WITH HOLD OPEN ARM, RECESSED LIFT HANDLE, EXPOSED PADLOCK CLIP, RIM SEAL GASKET AND STAINLESS STEEL HARDWARE OR EQUIVALENT.

### PUMP SCHEDULE

| TYPE/MODEL | MINIMUM CAPACITY | | MINIMUM CONN. SIZES | | MOTOR | | |
|---|---|---|---|---|---|---|---|
| | GPM | TDH(ft) | SUCTION | DISCHARGE | HP | RPM | ELECT. |
| DUPLEX FLYGT GRINDER PUMPS MODEL MP3068-218 | 120 | 53.5 | NA | 2" | 2.3 | 3325 | 230/60/1 |

THE PUMPS SHALL BE INSTALLED WITH A CSI PRESSURE ACTIVATED CONTROL (PAC 2) SYSTEM. THE PUMPS SHALL ALSO HAVE A BACKUP FLOAT LEVEL CONTROL SYSTEM.

ALL WORK ASSOCIATED WITH THIS SHEET SHALL BE SUBSIDIARY TO BID ITEM "LIFT STATION MODULE"


MKEC ENGINEERING CONSULTANTS, INC.
411 N. WEBB ROAD
WICHITA, KS. 67206
316-684-9600


SANITARY SEWER LIFT STATION AND FORCE MAIN
# BOTANICA - THE WICHITA GARDENS
STREETS AND UTILITIES

**LIFT STATION DETAILS**
SHEET TITLE

468-84683
PROJECT NUMBER

AJK
DESIGN BY

DMU
DRAWN BY

BLW
CHECKED BY

ISSUED
July 2010

REVISED

SHEET NO.
2 of 29

J:\CIVIL\08603\DWG\SAN\FORCE MAIN\08603_LS.DWG

PLOTTED: Tuesday, July 06, 2010 @ 03:10PM