STATE	PROJECT NO.	YEAR	SHEET NO.	TOTAL SHEETS
KANSAS	87 N-0361-01	2011	65	169

MKEC ENGINEERING CONSULTANTS, INC.
411 N. WEBB ROAD
WICHITA, KS. 67206
316 - 684 - 9600

LINCOLN STREET BRIDGE AND DAM IMPROVEMENTS OVER ARKANSAS RIVER

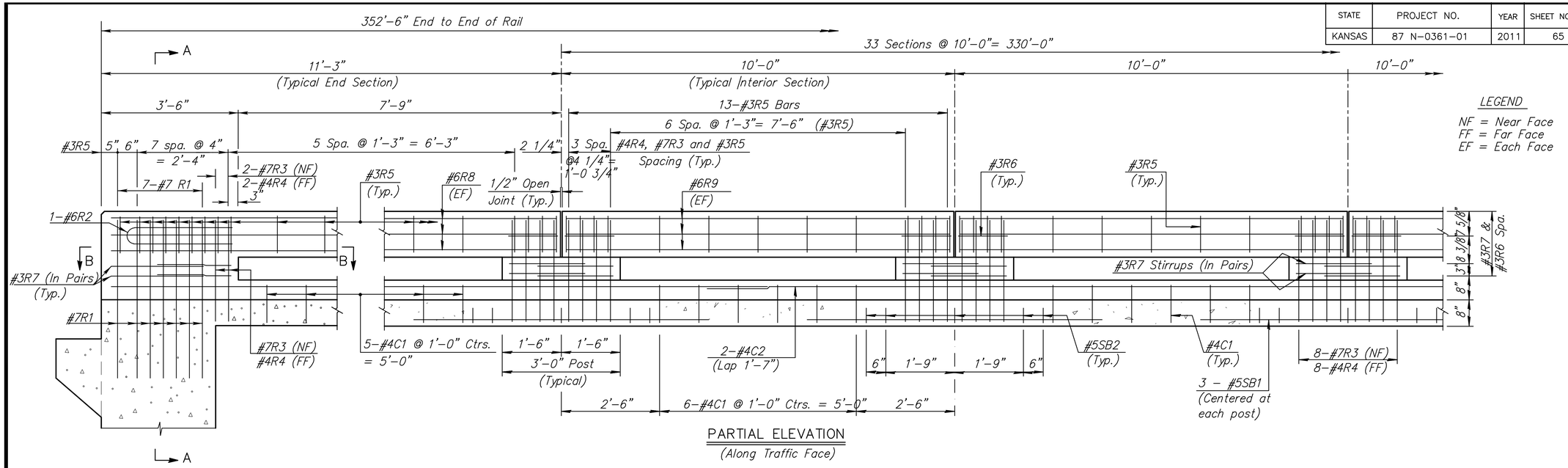

PARTIAL ELEVATION
(Along Traffic Face)

LEGEND
NF = Near Face
FF = Far Face
EF = Each Face

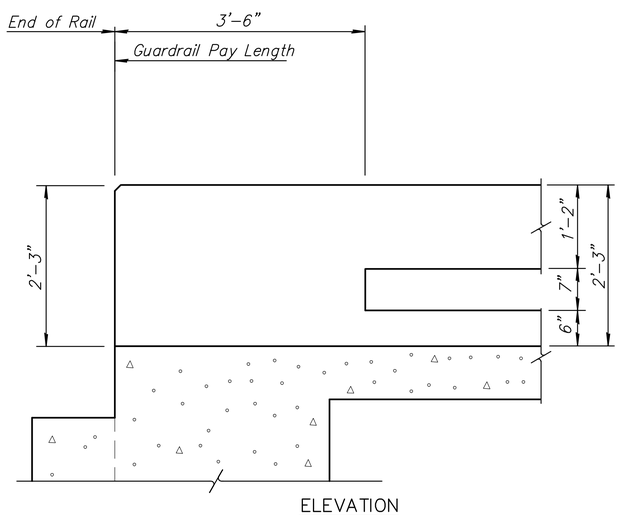

ELEVATION
(Dimensions at traffic face of rail.)

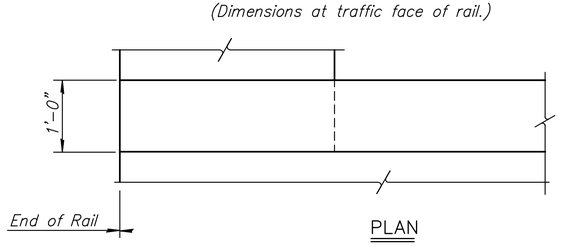

PLAN

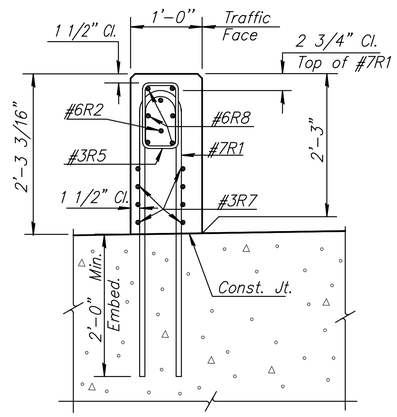

SECTION A-A

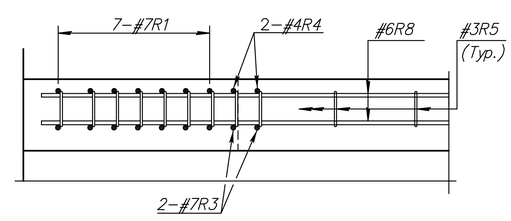

SECTION B-B

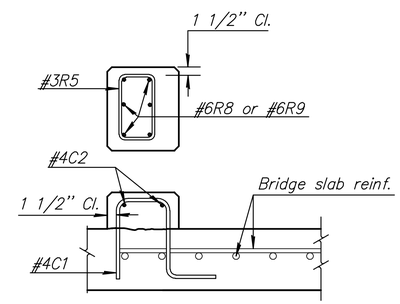

TYPICAL SECTION BETWEEN POSTS

UNIT STRESSES :
Grade 4.0(AE) Concrete f'c = 4,000 p.s.i.
Reinforcing Steel (Grade 60) (Epoxy Coated) fy = 60,000 p.s.i.

LOADING : AASHTO Specifications
10 Kip Transverse (Outward)
2.5 Kip Vertical Load
2.5 Kip Transverse (Inward)

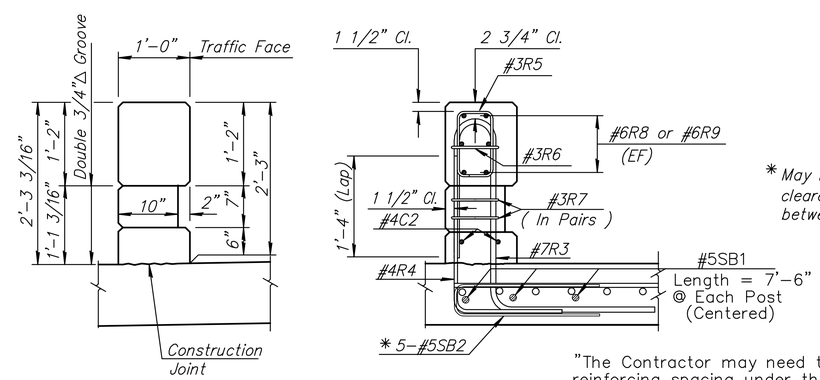

TYPICAL INTERIOR POST SECTIONS

* May be canted to provide clearance and/or fit between reinforcing.

"The Contractor may need to adjust the longitudinal reinforcing spacing under the rail."

LINCOLN ST. BRIDGE TRAFFIC RAIL
SHEET TITLE

472-84883
PROJECT NUMBER

JAG
DESIGN BY

DPG
DRAWN BY

KJS
CHECKED BY

ISSUED
1/24/2011

REVISED

SHEET NO.
65 of 169

J:\CIVIL\07-433\DWG\BRIDGE\PLANS\07433 TRAFFIC RAIL.DWG

PLOTTED: Tuesday, January 25, 2011 @ 08:17AM