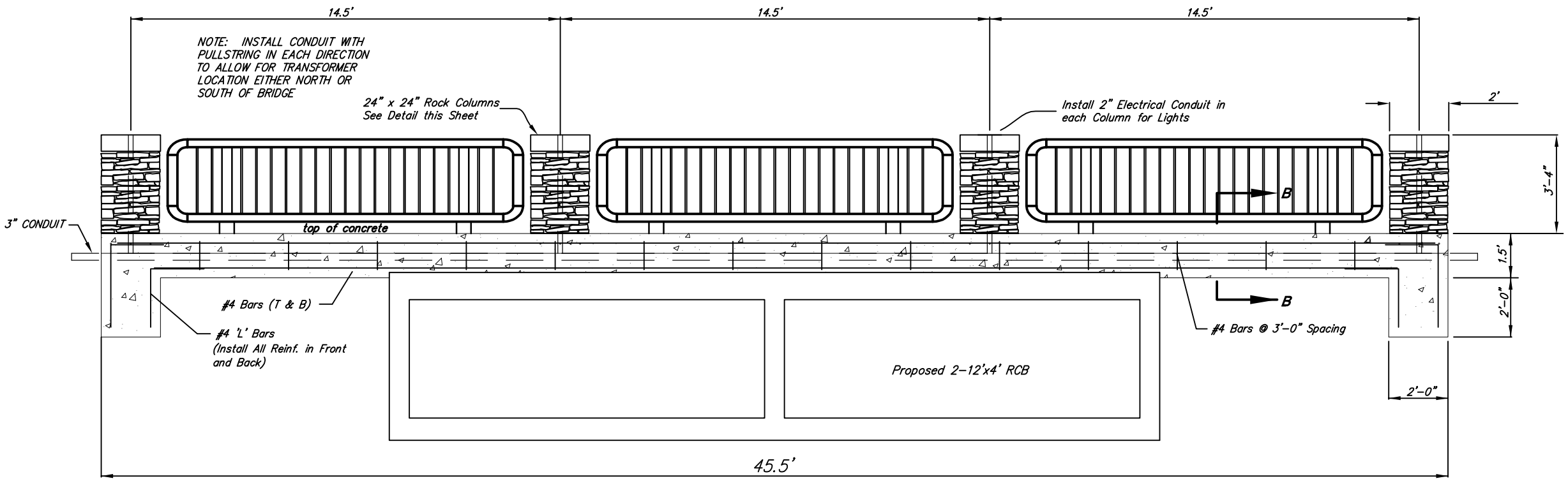

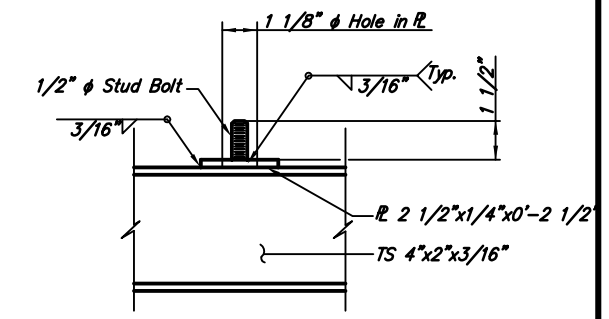

STUD BOLT DETAIL

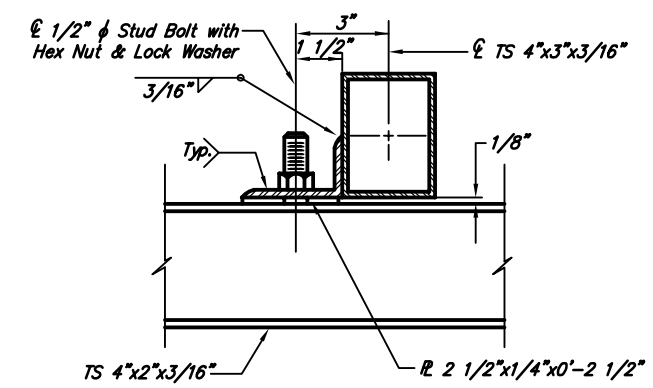

RAIL CONNECTION DETAIL

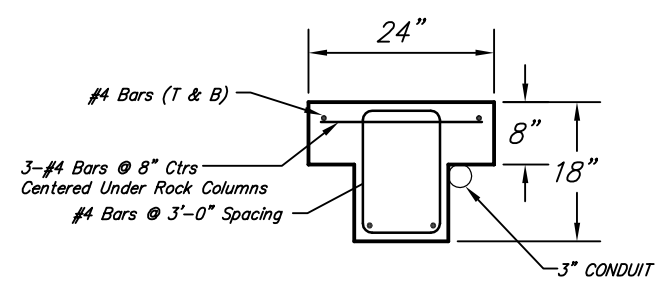

SECTION B-B

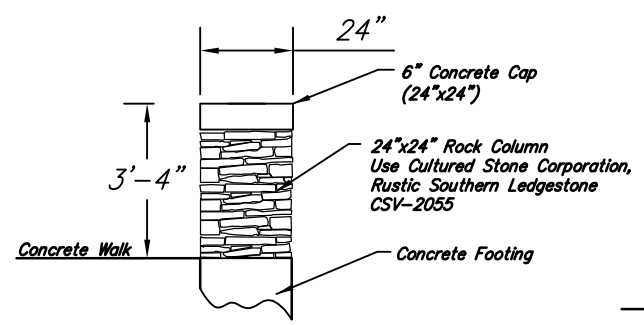

BRICK COLUMN DETAIL

Contractor shall submit sample prior to construction.

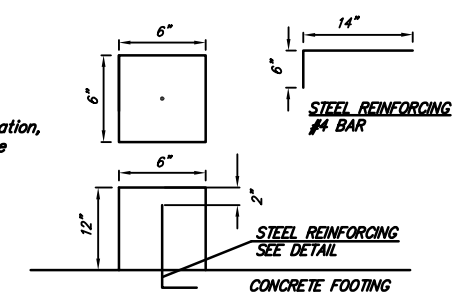

CONCRETE SUPPORT FOR ROCK COLUMN

CENTER COLUMN SUPPORTS ON CONCRETE FOOTING

BRIDGE HANDRAIL NOTES:

The rail members shall conform to ASTM Designation A36 or equivalent.

Rail shall be fabricated in lengths to include a minimum of two and a maximum of three panels. Posts shall be set vertical. Shims may be used between concrete and base plates of posts.

All parts of Bridge Handrail shall be painted. Shop and field coats shall conform to organic or inorganic Zinc for primer and "High-Build Polyurethane Finish Coat" at the Standard Specifications for State Road and Bridge Construction, 1990 Edition, Kansas Department of Transportation. All materials, equipment and labor necessary for the installation of the Handrail on the bridge shall be subsidiary to the bid item, "Handrail".

Handrail shall be hunter Green in color. Contractor to submit color chart to Engineer for approval.

Touch Up: All bolts, nuts and studs and other small areas of damaged paint (10 S.F. or less) requiring touch up will be prepared and painted w/approved alluminum epoxy mastic primer.

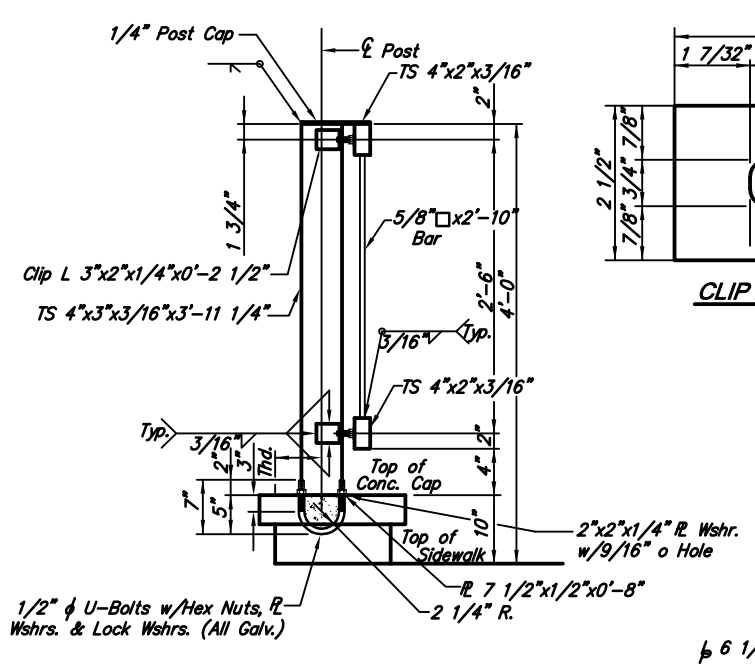

SECTION A-A

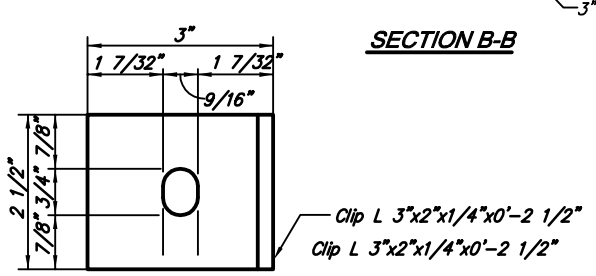

CLIP DETAIL

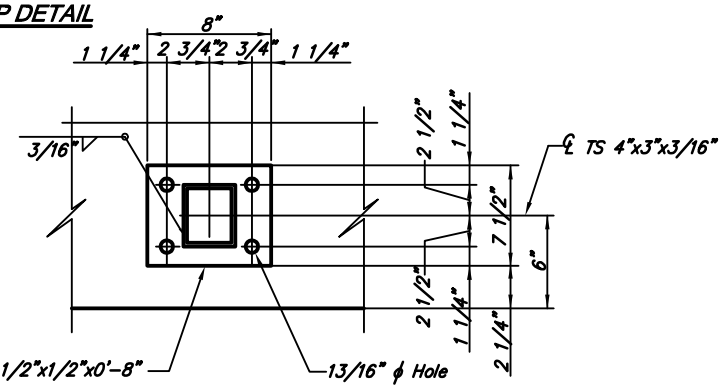

BASE PLATE DETAIL

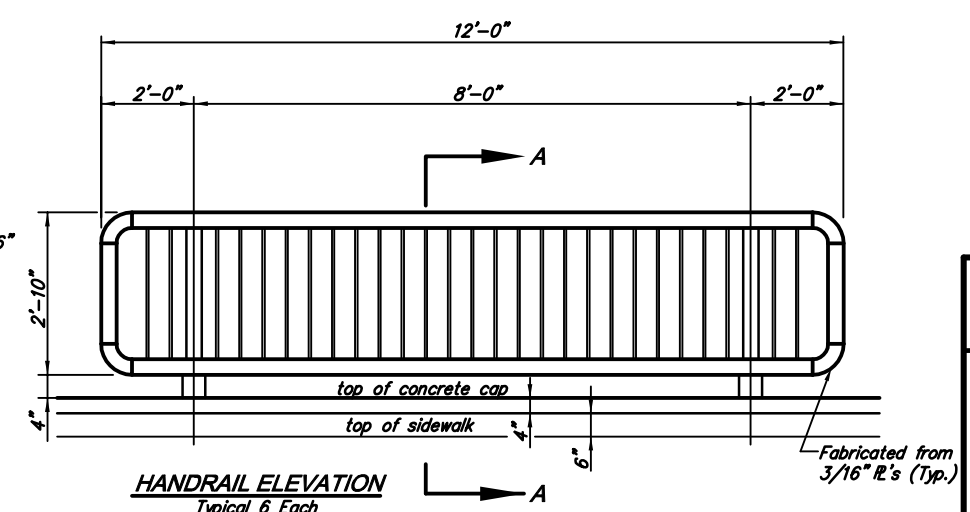

HANDRAIL ELEVATION

Typical 6 Each

ALL WORK AND MATERIAL ON THIS SHEET SHALL BE BID UNDER 'LUMP SUM' FOR HANDRAIL CONSTRUCTION.

SAWMILL CREEK ADDITION
HANDRAIL DETAILS
WICHITA, KANSAS

Ruggles & Bohm, P.A.
Engineering, Surveying, Land Planning
924 North Main
Wichita, Kansas 67203
www.rbkansas.com
(316) 264-8008
(316) 264-4621 fax
E-mail: info@rbkansas.com

DESIGN	AML
DRAWN	AML
REVIEW	
UTILITY	
DATE	Jan. 18, 2005
RB JOB	2005E
SHEET	4 OF 13
DRAWING FILE	POND {HANDRAIL DETAILS}
PROJECT NUMBER	468-83169