STATE	PROJECT NO.	YEAR	SHEET NO.	TOTAL SHEETS
KANSAS	468-83637	2005	9	21

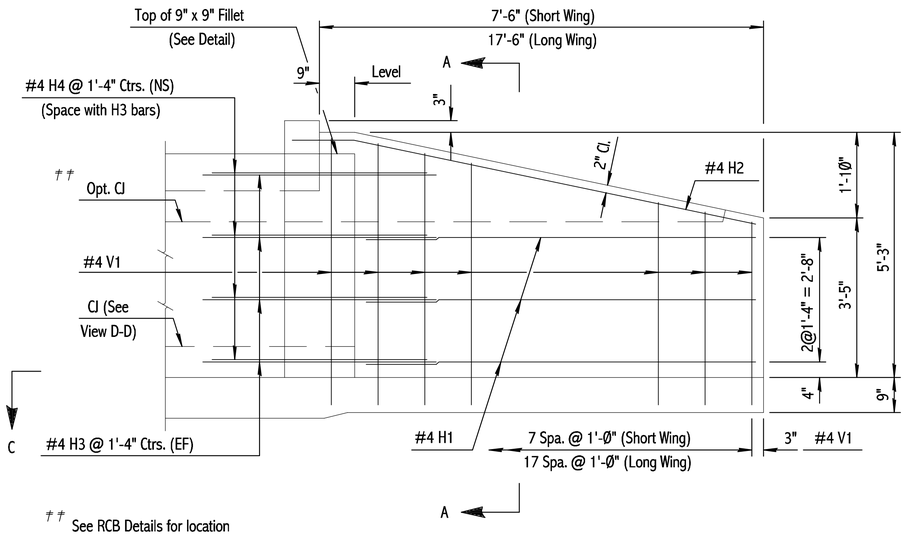

ELEVATION OF WINGWALL

(Backface Shown)

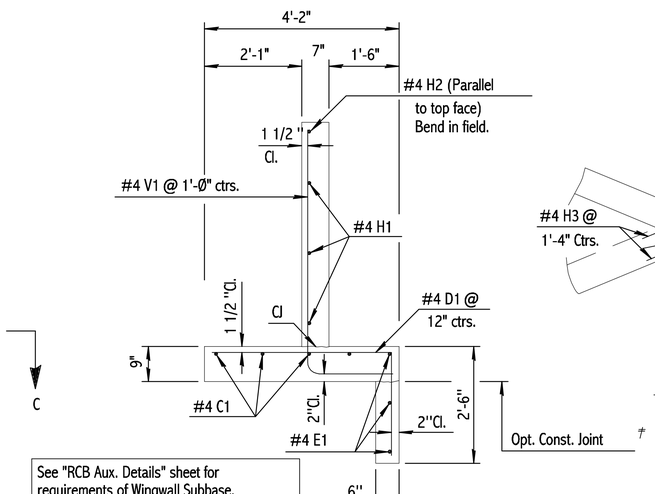

SECTION A-A

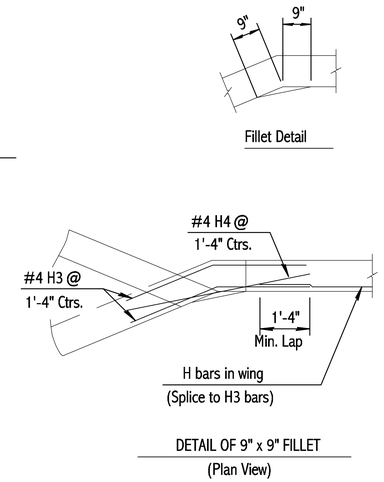

DETAIL OF 9" x 9" FILLET

(Plan View)

Bar	Incrmts.
V1S	3 1/4 "
V1L	1 1/4 "

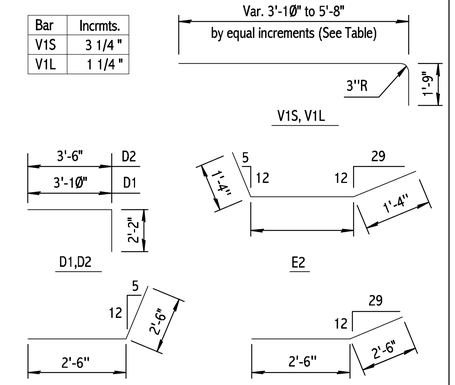

BENDING DIAGRAM

(All dimensions are out to out of bars.)

GENERAL NOTES

LOADING: HS20-44 AASHTO Specifications, 1983 Edition.

UNIT STRESSES: Class AAA Concrete; f'c = 4,000 p.s.i.
Reinforcing Steel; fy = 60,000 p.s.i.

FILL HEIGHT: Unless otherwise noted, the Design Fill Height is measured from the riding surface at the culvert and shall include the surfacing.

CONCRETE: Class AAA Concrete shall be used throughout. Bevel all exposed edges with a 3/4 inch triangular moulding. Where Class AAA Concrete (AE) is specified, it shall be placed in the top slab above the Construction Joint.

REINFORCING: All reinforcing shall conform to ASTM A615, Grade 60. All dimensions relative to reinforcing steel shall be to centerline of bar unless otherwise noted.

EXCAVATION: Excavation for culverts less than bridge length shall not be paid for directly but shall be subsidiary to Class AAA Concrete. Excavation for RCB Bridges shall be paid for as Class | | | Excavation.

SEAL COURSE: A Seal Course may be required by the Engineer. The Seal Course shall be unreinforced Concrete (Commercial Grade) to a minimum depth of 3 inches or as determined by the Engineer. Concrete for the seal course shall be paid for at the unit price set for Concrete for Seal Course.

FOUNDATION STABILIZATION: Foundation Stabilization may be required as directed by the Engineer. The depth of Foundation Stabilization shall be determined by the Engineer. Foundation Stabilization shall be paid for at the determined Unit Price set for Foundation Stabilization. See Auxiliary Details.

QUANTITIES: The quantities shown in the Culvert Summary include apron and/or soil saver quantities when their construction is required by the plans. Payment for additional quantities that result from including seal course and/or floating apron, as a change in original plans, shall be made at the Unit Price bid for the various items involved.

GRANULAR BACKFILL (WINGWALLS): Special backfill procedures may be required at the direction of the Engineer. See Auxiliary Details Sheet.

STRIKE LINE: Wingwalls and that portion of the RCB outside the Strike Line shall be constructed level. Footing for wingwalls shall be constructed with the culvert floor. See wingwall detail sheet.

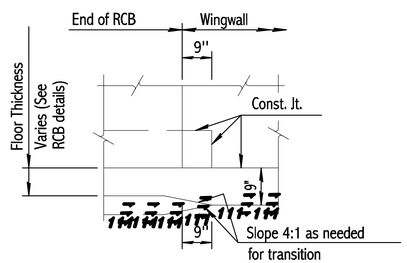

VIEW D-D

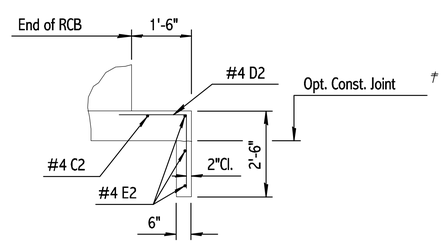

SECTION E-E

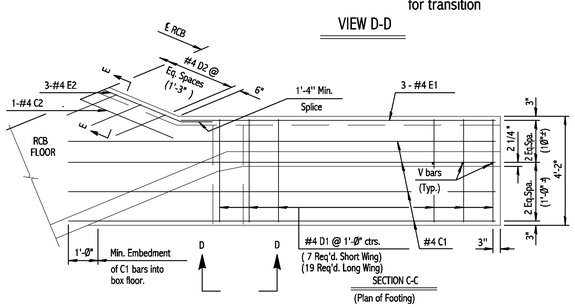

SECTION C-C

(Plan of Footing)

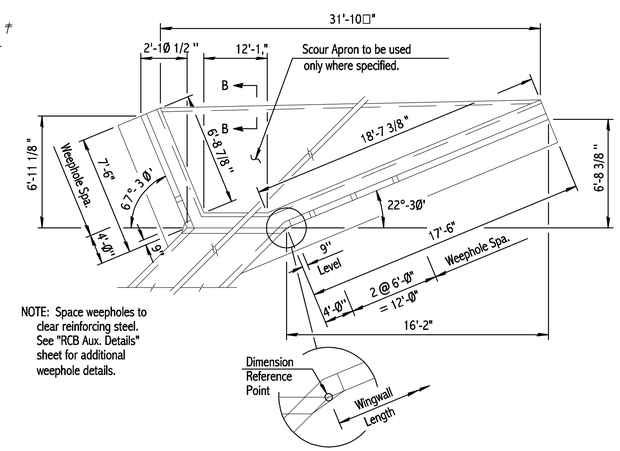

NOTE: Space weepholes to clear reinforcing steel. See "RCB Aux. Details" sheet for additional weephole details.

WING DIMENSIONS FOR 45 SKEWED BOX

(3 1/2 :1 Embankment Slope)

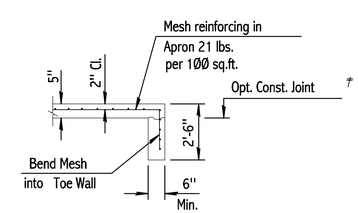

SECTION B-B

Minimum Splice Lengths	
#4	1'-4"
#5	1'-8"
#6	2'-0"

CULVERT SUMMARY

Flow Line Elev. Lt.	Flow Line Elev. Rt.	Crown Gr. Elev.	Design Fill Ht.	Skew	Left Wings	Right Wings	Scour Apron	Soil Saver	Concrete			Reinf. Steel (Gr. 60)		
									Barrel (Cu.Yds.)	Wings (Cu.Yds.)	Total (Cu.Yds.)	Barrel (Lbs.)	Wings (Lbs.)	Total (Lbs.)