PUMP SITE LAYOUT & DETAILS

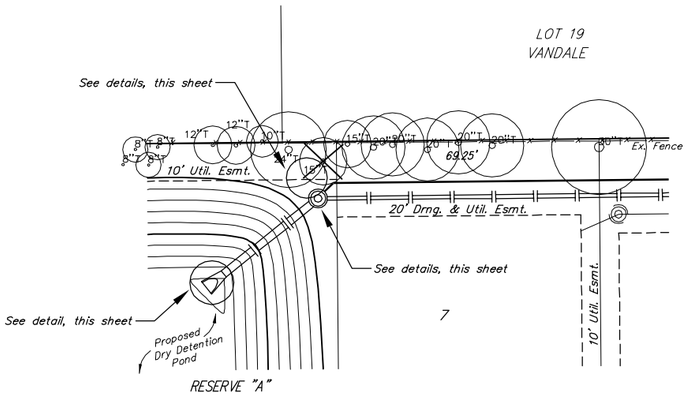

PUMP SITE LAYOUT

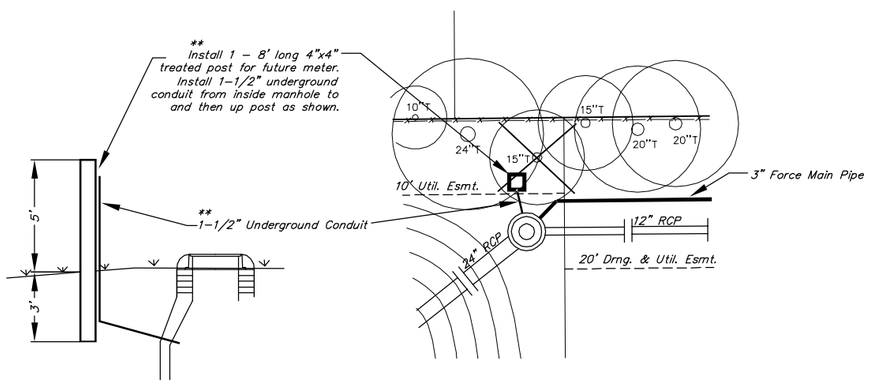

PUMP SITE LAYOUT DETAIL

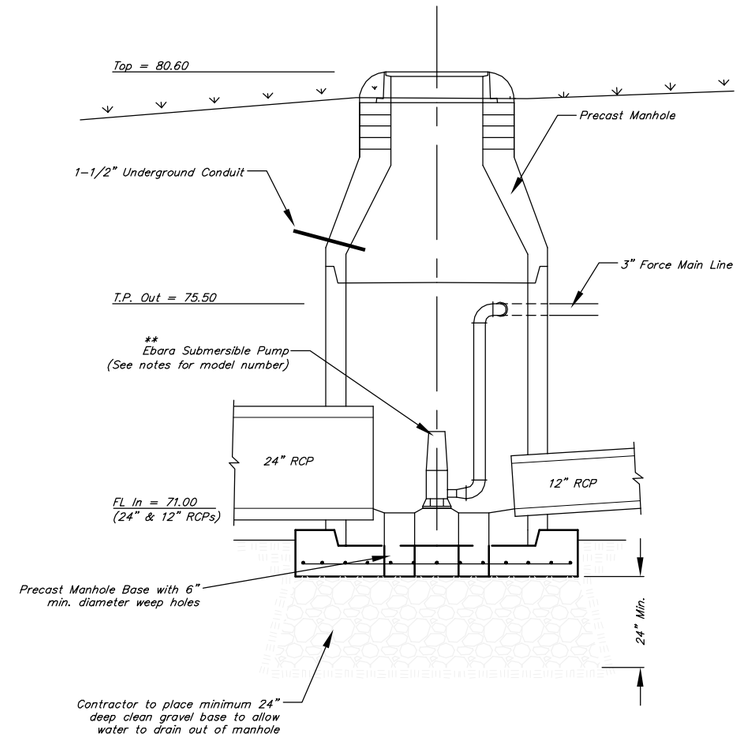

MANHOLE SECTION DETAIL

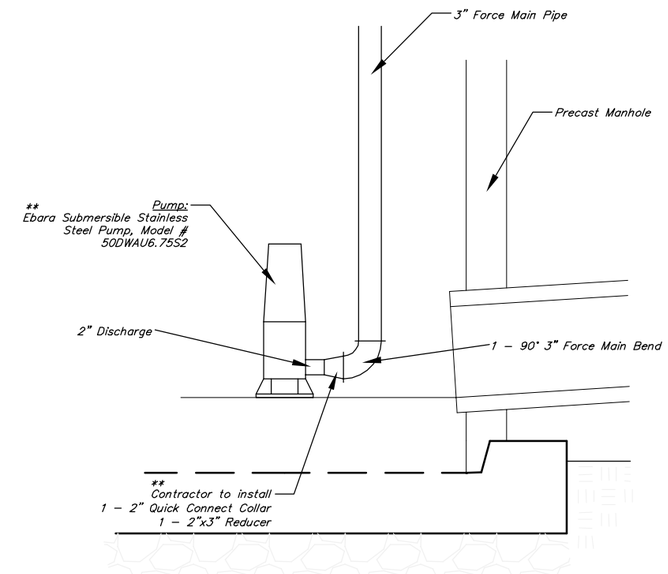

PUMP CONNECTION DETAIL

** Items incidental to bid item "Lift Station"

NOTES:

1. Contractor shall give all pump equipment manuals and ownership documents to Baughman Company, P.A. so that the Developer and Homeowners Association will receive copies.

2. Contractor does NOT have to run electricity to the pump. All electrical needs will be taken care of when power is supplied to the site and indiviual lots.

3. The Precast Manhole to house the discharge pump shall conform to the City of Wichita Specifiations and General Notes for Precast Manholes with the minor design changes on this sheet incorporated into the manhole.

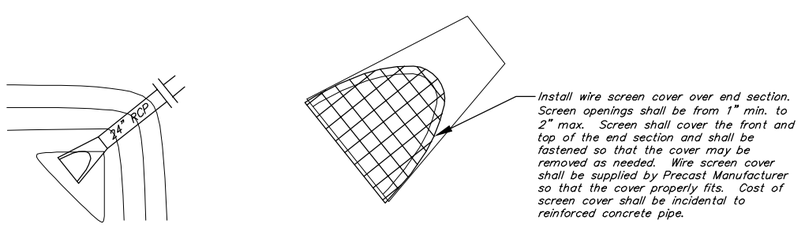

24" END SECTION DETAIL

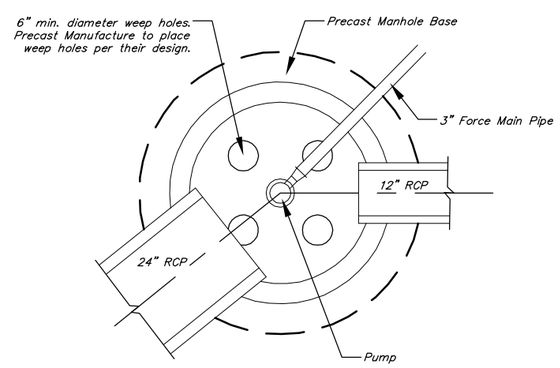

MANHOLE PLAN DETAIL

Baughman

MY HOUSE ADDITION
Pump Site Layout
and Details
Storm Water Sewer Improvements

Baughman Company, P.A. 315 Ellis St. Wichita, KS 67211 P 316-263-7271 F 316-263-0149
ENGINEERING | SURVEYING | PLANNING | LANDSCAPE ARCHITECTURE

PROJECT NUMBER 468-83836	DESIGN MWS / DRAWN MWS
REVISIONS:	APPROVED / DATE 01/05
	SCALE NONE
	SHEET 13 OF 22

My House\Pump site sheet.dwg 04-05-E877