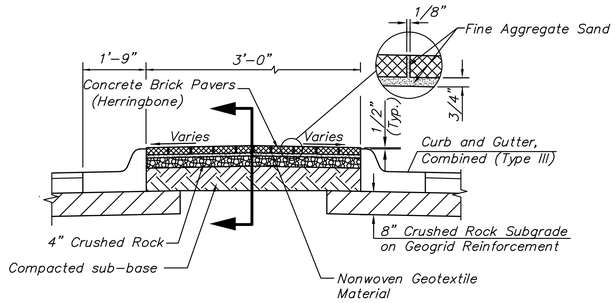

PAVING BRICK MEDIAN DETAIL

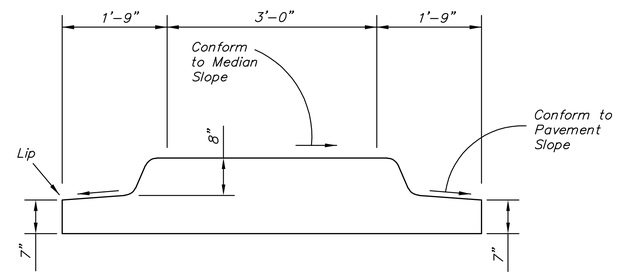

SECTION B-B

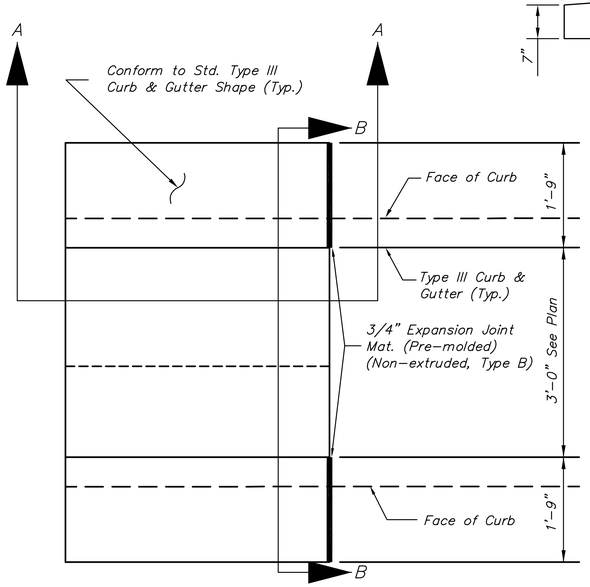

CONCRETE RAMP NOSE SECTIONS (MEDIAN)

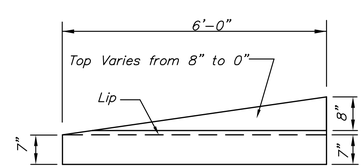

SECTION A-A

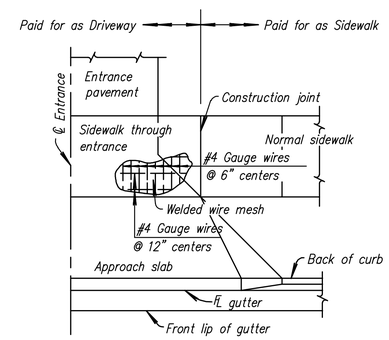

REINFORCEMENT DIAGRAM
SIDEWALK THROUGH ENTRANCE

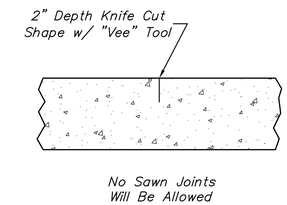

CONTRACTION JOINT (C.J.)

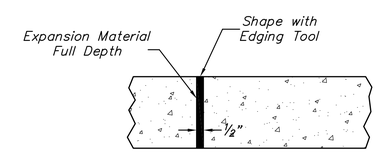

EXPANSION JOINT (E.J.)

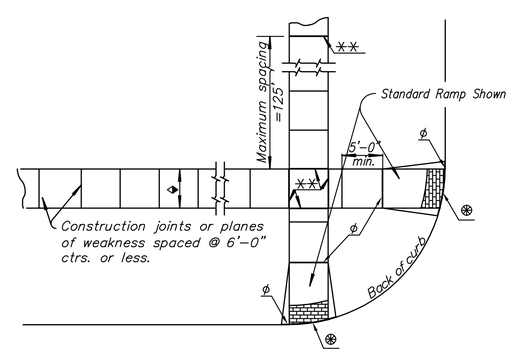

PLAN

SIDEWALK

NOTE:

Sidewalk shall always have a cross-slope of 1/4 inch per foot or less, even through driveways unless directed otherwise by the Engineer.

** Expansion joint (3/4" redwood board) located as shown.

◆ Variable width (5'-0" min.). Entrance walk to be same width as approach walk. Sidewalk width of 4'-0" may be used where existing conditions prohibit use of 5'-0".

ϕ Expansion Joint (3/4" Redwood board) placed at either back of curb line or at sidewalk line.

⊛ Detectable warning installation is typical and required on Sidewalk Ramps. Refer to Ramp Detail sheet.

MKEC
ENGINEERING
CONSULTANTS, INC.
411 N. WEBB ROAD
WICHITA, KS. 67206
316 - 684 - 9600

JAY ANDLEY
LICENSED
No. 13288
PROFESSIONAL ENGINEER

STREET IMPROVEMENTS FOR
135th Street West
from 13th Street to 21st Street North

MEDIAN AND SIDEWALK DETAILS
SHEET TITLE

MKEC PROJ #10265
PROJECT NUMBER

JRA
DESIGN BY
JSB
DRAWN BY
JRA
CHECKED BY

ISSUED
February 2012
REVISED

SHEET NO.
64 of 231

PLOTTED: Thursday, February 16, 2012 @ 11:12AM

J:\Civil\10265\DWG\Details\SWDTL1