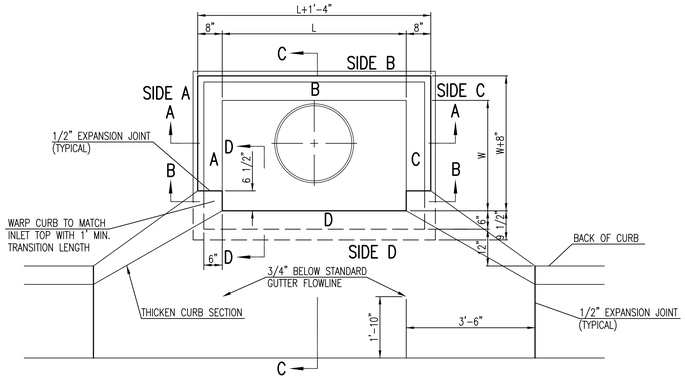

TOP VIEW

BAR SCHEDULE		
INLET OPENING	B1 BARS	SPACING
5'-0"	#4	4"
10'-0"	#6	3.5"

PRECAST CURB INLET WIDTHS				
W	PRE-CAST TOP SIZE			PIPE DIA.**
	WIDTH	LENGTH	TOP	
3'-0"	W+8"	L+1'-4"	7 1/2"	21" & SMALLER
4'-0"	W+8"	L+1'-4"	7 1/2"	24" & 30"
5'-0"	W+8"	L+1'-4"	7 1/2"	36" & 42"
6'-0"	W+8"	L+1'-4"	7 1/2"	48" & 54"
7'-0"	W+8"	L+1'-4"	7 1/2"	60" & 66"

** FOR PIPES PERPENDICULAR TO INLET WALL

GENERAL NOTES

1. CONCRETE TOPS TO BE INSTALLED ON THIN MORTAR CUSHION TO INSURE FULL SUPPORT ALONG BRICK. CONCRETE TOPS MAY BE CAST IN PLACE OR PRECAST. CONCRETE USED FOR INLET CONSTRUCTION SHALL CONFORM TO CITY OF WICHITA SPECIFICATIONS FOR CONCRETE PAVEMENT MIX.
2. CONTRACTOR SHALL HAVE THE OPTION OF CONSTRUCTING 8" BRICK MASONRY WALLS BETWEEN THE CONCRETE INLET BASE AND TOP OF THIS INLET WHEN W=5'-0" AND H=7'-0" OR LESS.
3. INLET INVERT SHALL BE SHAPED WITH 8 SACK SAND MIX CONCRETE TO CREATE FLOW CHANNELS AND TO INCREASE HYDRAULIC EFFICIENCY SUCH THAT THE INLET WILL BE SELF CLEANING BETWEEN ALL INLET AND/OR OUTLET PIPES.
4. THE ENDS OF ALL PIPES INSTALLED IN INLETS SHALL BE CUT OFF FLUSH WITH THE INSIDE FACE OF THE INLET WALL.
5. INLET FRAME AND COVER TO BE DEETER #2014, EJIW #1936-Z4, OR APPROVED EQUAL, SEE SW-303.
6. CONTRACTOR SHALL REMOVE LIFTING HOOKS AFTER INSTALLATION. RECESSES IN INLET WALL SHALL BE GROUTED FLUSH TO THE INLET WALL WITH HYDRAULIC CEMENT AFTER THE INLET IS IN PLACE. LIFTING HOLES THRU THE INLET WALL WILL NOT BE ACCEPTED.

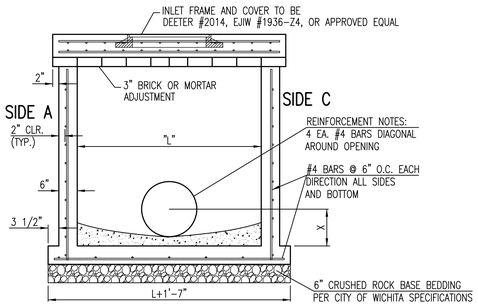

SECTION "A-A"

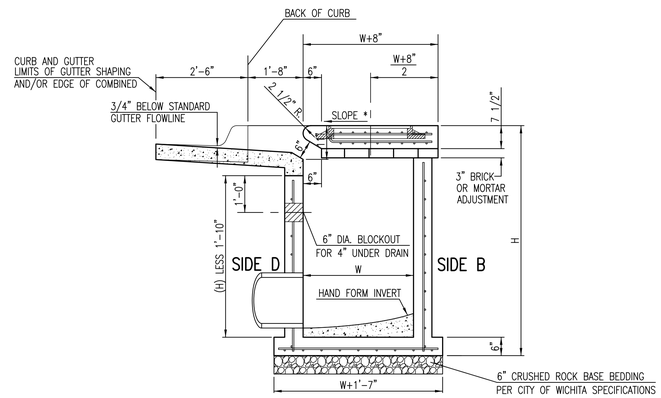

SECTION "C-C"

NOTES:
* SLOPE OF INLET TOP TO MATCH SIDEWALK OR PARKING SLOPES WITHIN LIMITS INDICATED.

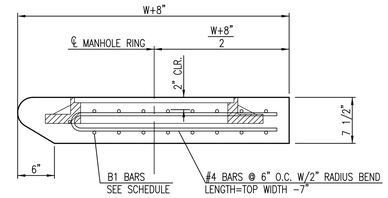

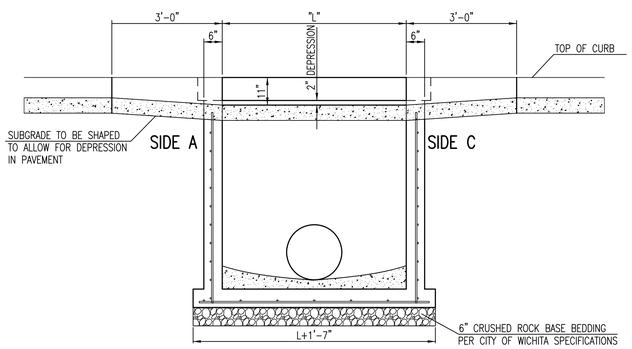

SECTION "B-B"

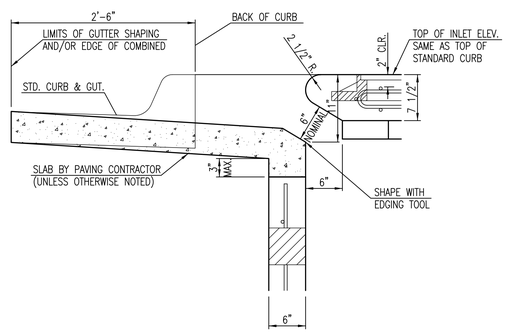

SECTION "D-D"

CITY OF WICHITA
PUBLIC WORKS & UTILITIES
ENGINEERING DIVISION

STANDARD TYPE 1A
CURB INLET
5'-0" OR 10'-0" OPENING

CITY ENGINEER
JAMES L. ARMOUR, P.E., L.S.

PROJECT NUMBER	OCA NUMBER	DATE
XXXXPPD	607861	9/2011

CITY ENGINEER'S OFFICE
CITY HALL - SEVENTH FLOOR
455 NORTH MAIN STREET
WICHITA, KANSAS 67202-1620
(316) 268-4501

DESIGN | DRAWN
SHEET 3 of 5

SW-103

MKEC ENGINEERING CONSULTANTS, INC.
411 N. WEBB ROAD
WICHITA, KS. 67206
316 - 684 - 9600

Saved 09-28-2011 3:38:28 PM by SEVANS
Plot Scale 1:1 09-30-2011 8:02:07 AM by SCOTT EVANS
J:\Projects\2011\110101258_Surgicare\5-Civil\CAD\Sws\11258_001

J:\Projects\2011\110101258_Surgicare\5-Civil\CAD\Sws\11258_DD1.dwg

ARCHITECTURE
PLANNING
INTERIOR DESIGN

Lyman Davidson Dooley, Inc.
209 10th Avenue South
Suite 327, Cummins Station
Nashville, TN 37203
615.244.7399 t
615.244.6697 f
ldd-architects.com

ATLANTA
NASHVILLE
TAMPA

REVISIONS

GREGORY J. ALLEN LICENSED PROFESSIONAL ENGINEER 11159 STATE OF KANSAS 9/30/11

THIS DRAWING IS THE PROPERTY OF LYMAN DAVIDSON DOOLEY INCORPORATED ARCHITECTS. IT IS NOT TO BE REPRODUCED IN WHOLE OR IN PART. IT IS NOT TO BE USED ON ANY OTHER PROJECT. IT SHALL BE RETURNED UPON REQUEST. COPYRIGHT AS DATED LYMAN DAVIDSON DOOLEY. NOT VALID UNLESS SIGNED AND SEALED

Early Release
Site / Foundation / Structural Steel Package
Surgicare of Wichita
Wichita, Kansas

Surgicare of Wichita
2818 North Greenwich Rd
Wichita, Kansas 67226

HCA Inc.
One Park Plaza
Nashville, Tennessee
37203

TITLE SWS Details
STATUS SITE / FOUNDATION / STRUCTURAL STEEL
JOB 211005.00
QC GJA
DRAWN SPE
SHEET C620
DATE 09/30/2011