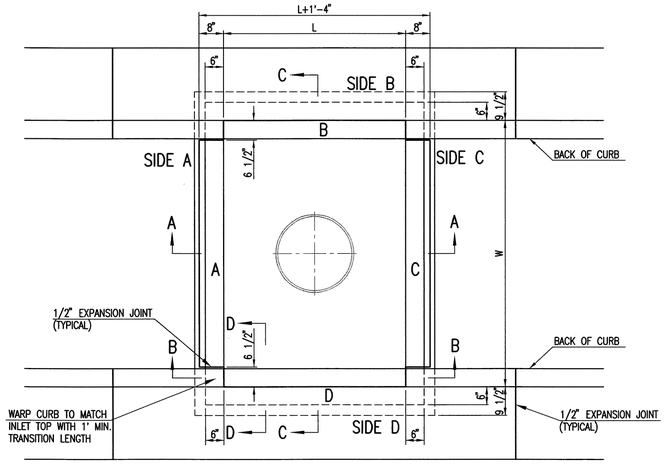

TOP VIEW

PRECAST CURB INLET WIDTHS				
W	PRE-CAST TOP SIZE			PIPE DIA.**
	WIDTH	LENGTH	TOP	
3'-0"	W+8"	L+1'-4"	7 1/2"	21" & SMALLER
4'-0"	W+8"	L+1'-4"	7 1/2"	24" & 30"
5'-0"	W+8"	L+1'-4"	7 1/2"	36" & 42"
6'-0"	W+8"	L+1'-4"	7 1/2"	48" & 54"
7'-0"	W+8"	L+1'-4"	7 1/2"	60" & 66"

** FOR PIPES PERPENDICULAR TO INLET WALL

BAR SCHEDULE		
INLET OPENING	B1 BARS	SPACING
5'-0"	#4	4"
10'-0"	#6	3.5"

GENERAL NOTES

1. CONCRETE TOPS TO BE INSTALLED ON THIN MORTAR CUSHION TO INSURE FULL SUPPORT ALONG BRICK. CONCRETE TOPS MAY BE CAST IN PLACE OR PRECAST. CONCRETE USED FOR INLET CONSTRUCTION SHALL CONFORM TO CITY OF WICHITA SPECIFICATIONS FOR CONCRETE PAVEMENT MIX.
2. CONTRACTOR SHALL HAVE THE OPTION OF CONSTRUCTING 8" BRICK MASONRY WALLS BETWEEN THE CONCRETE INLET BASE AND TOP OF THIS INLET WHEN W=5'-0" AND H=7'-0" OR LESS.
3. INLET INVERT SHALL BE SHAPED WITH 8 SACK SAND MIX CONCRETE TO CREATE FLOW CHANNELS AND TO INCREASE HYDRAULIC EFFICIENCY SUCH THAT THE INLET WILL BE SELF CLEANING BETWEEN ALL INLET AND/OR OUTLET PIPES.
4. THE ENDS OF ALL PIPES INSTALLED IN INLETS SHALL BE CUT OFF FLUSH WITH THE INSIDE FACE OF THE INLET WALL.
5. INLET FRAME AND COVER TO BE DEETER #2014, EJIW #1936 Z4, OR APPROVED EQUAL, SEE SW-303.
6. CONTRACTOR SHALL REMOVE LIFTING HOOKS AFTER INSTALLATION. RECESSES IN INLET WALL SHALL BE GROUTED FLUSH TO THE INLET WALL WITH HYDRAULIC CEMENT AFTER THE INLET IS IN PLACE. LIFTING HOLES THRU THE INLET WALL WILL NOT BE ACCEPTED.

PAVEMENT UNDERDRAIN SHALL BE INSTALLED ON ALL CURB INLETS.

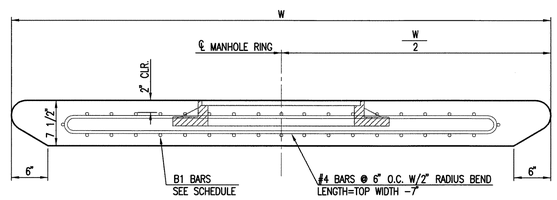

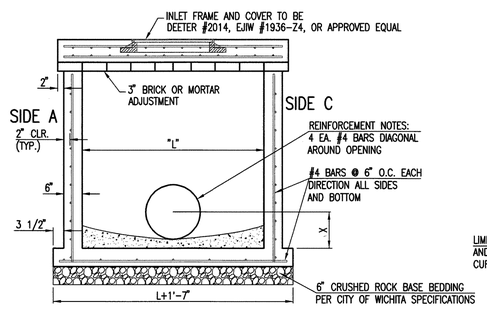

SECTION "A-A"

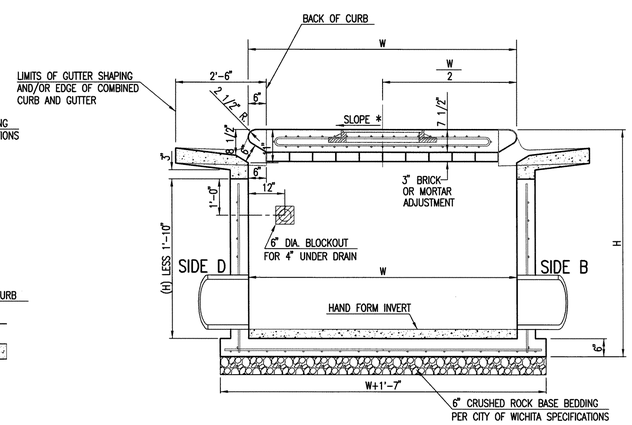

SECTION "C-C"

NOTES:
* SLOPE OF INLET TOP TO MATCH SIDEWALK OR PARKING SLOPES WITHIN LIMITS INDICATED.

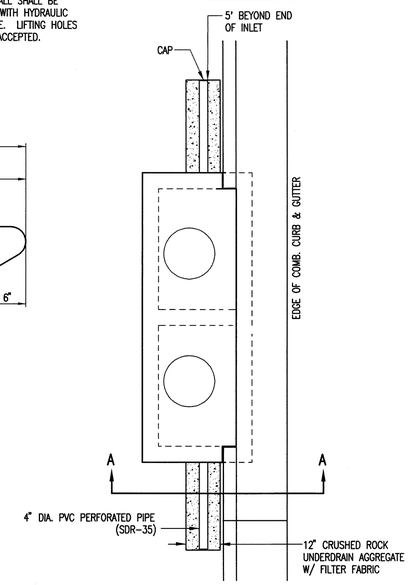

TYPE 1 & 2 INLET

PAVEMENT UNDERDRAIN DETAIL

BID ITEM TO BE PROVIDED PER 4" PERFORATED UNDERDRAIN PIPE.

GENERAL NOTES

1. PAVEMENT CONTRACTOR WILL BE REQUIRED TO INSTALL SDR 35, 4" PERFORATED DRAIN PIPE AND TEE AS INDICATED IN THE DETAILS ABOVE. A PIPE STUB HAS BEEN INSTALLED THROUGH WALLS OF CURB INLETS BY OTHERS IN A MANNER ALLOWING CONNECTION OF ADDITIONAL DRAIN PIPE AND TEE AS REQUIRED BY DETAILS ABOVE.
2. WHEN SWD CONSTRUCTED BY SEPARATE PROJECT, SWS CONTRACTOR SHALL INSTALL SDR 35, 4" DRAIN PIPE STUB ONLY THROUGH WALLS OF CURB INLETS AND CAP TO ALLOW FUTURE CONNECTION OF TEE AND ADDITIONAL DRAIN PIPE BY OTHERS.

CRUSHED ROCK GRADATION REQUIREMENTS
PERCENT OF AGGREGATE RETAINED

1 1/2"	0
3/4"	15-60
# 4	40-80
#40	74-92
P-200	4-12

ROCK QUALITY SHALL BE THE SAME AS SPECIFIED FOR COARSE AGGREGATE FOR ASPHALT CONCRETE MIXES.

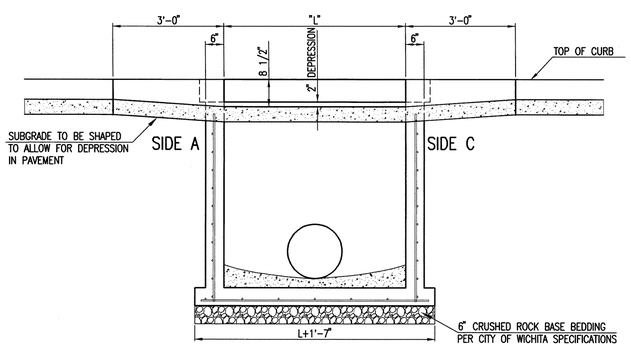

SECTION "B-B"

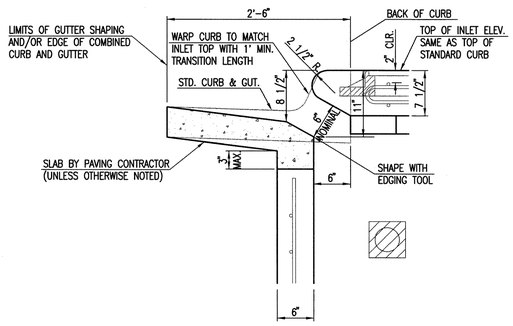

SECTION "D-D"

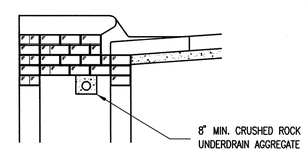

(MIN. 16 PERFORATIONS PER LIN. FT. @ 1/4" DIA.)
PERFORATIONS TO BE ON BOTTOM HALF

SECTION A-A

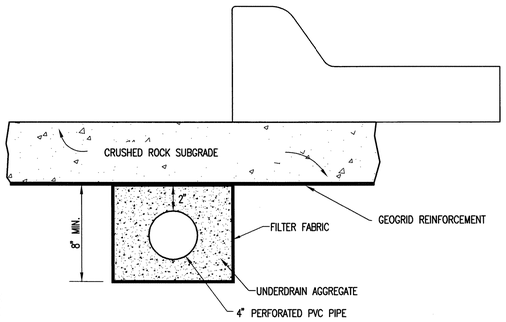

SECTION A-A

PRINTS ISSUED

DATE	PURPOSE	NO.
06/20/11	FOR BID	

SEDGWICK COUNTY
COLEMAN PARKING LOT
WICHITA, KANSAS

LawKingdon Architecture
Engineering · Planning · Interiors · Landscapes

LawKingdon Architecture ©
345 RIVERVIEW, WICHITA, KS 67203
Phone (316) 268-0230 Fax: (316) 268-0205
CONTACT: BENJAMIN M. MABRY, P.E.

PROJECT NUMBER:
10422

SHEET TITLE:
DOUBLE THROATED TYPE 1 CURB INLET DETAILS

SHEET NUMBER:
C2.4

BENJAMIN M. MABRY LICENSED 20923 PROFESSIONAL ENGINEER KANSAS
6/20/11

PEC PROFESSIONAL ENGINEERING CONSULTANTS, P.A.
303 SOUTH TOPEKA WICHITA, KS 67202
316-262-2691 www.pec1.com

Saved: 6/6/2011 9:32:50 AM by: VIM
Plot Scale: 1:1 06/20/2011 8:42:46 AM by: JEFF L. MURPHY
O:\2010\10465\002\10465-002-C-DBL THROAT CURB INLET