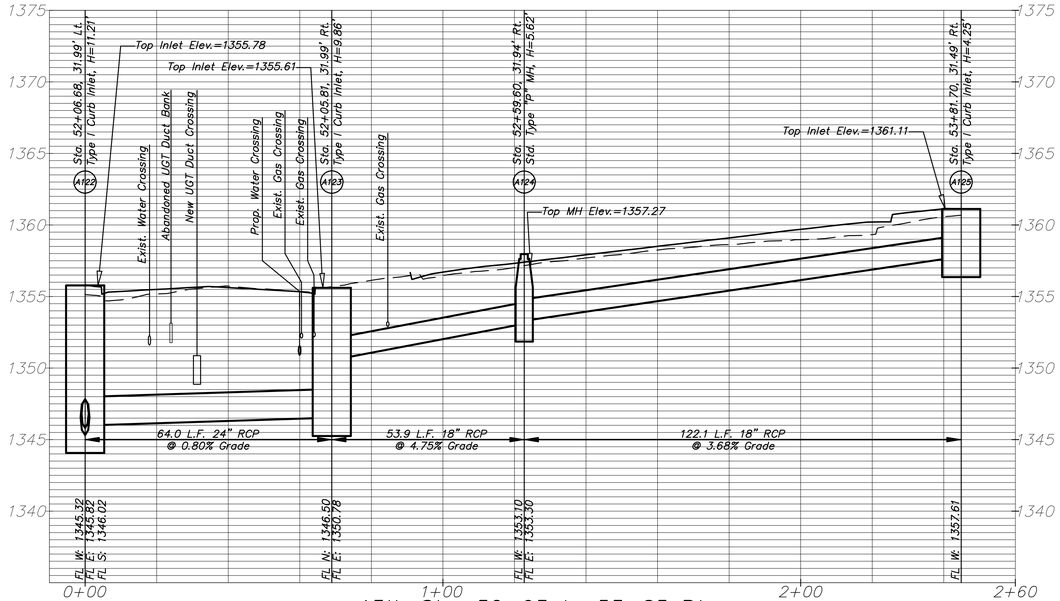

13th Sta. 52+03 to 53+85 Rt.

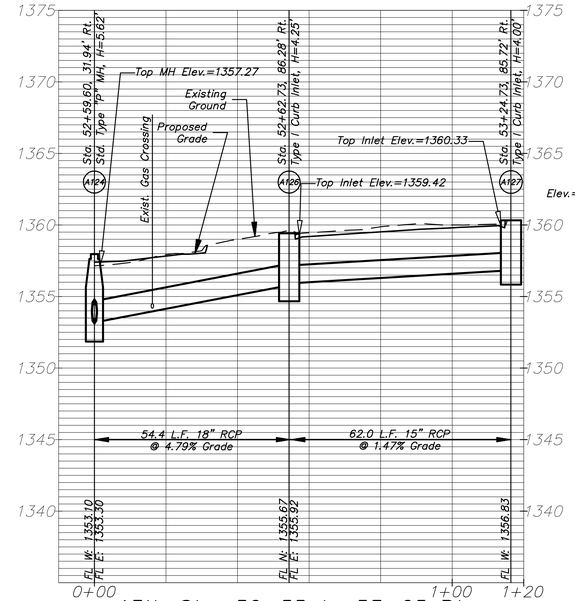

13th Sta. 52+55 to 53+25 Rt.

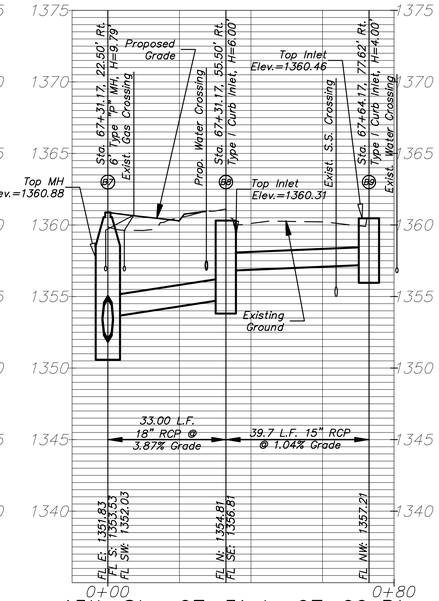

13th Sta. 67+31 to 67+66 Rt.

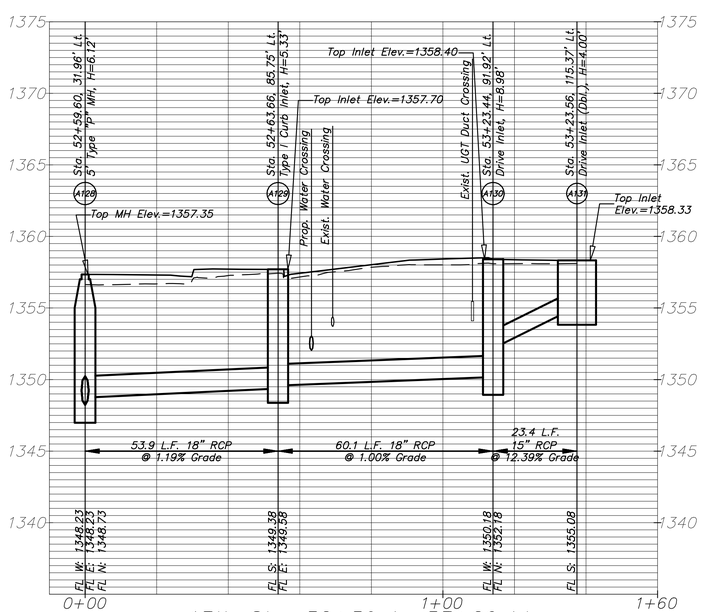

13th Sta. 52+59 to 53+26 Lt.

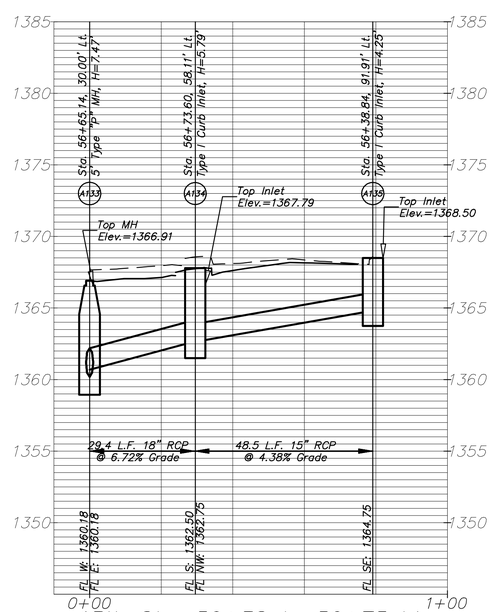

13th Sta. 56+38 to 56+75 Lt.

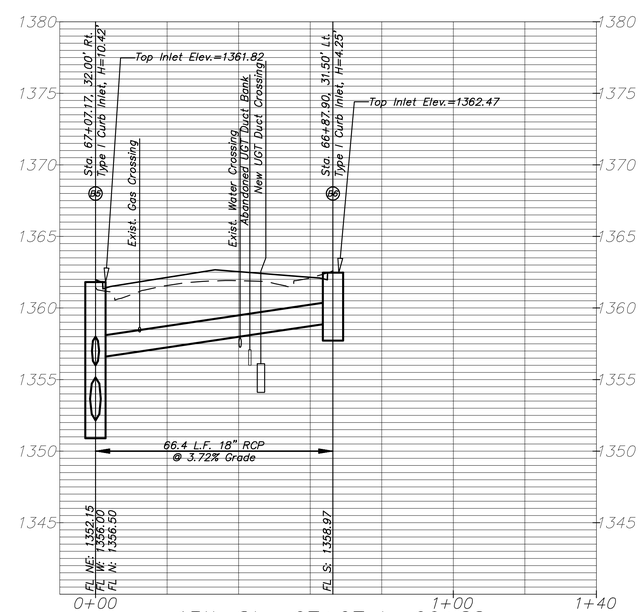

13th Sta. 67+07 to 66+88

No.	Date	By	Approved	Revision

13TH STREET NORTH FROM HYDRAULIC TO OLIVER
STREET & DRAINAGE IMPROVEMENTS
STORM SEWER PLAN & PROFILE
CITY OF WICHITA, KANSAS
JAMES L. ARMOUR, P.E., L.S. – CITY ENGINEER
C.O.W. Proj# 472-84320 O.C.A.# 706933

POE & ASSOCIATES, INC.
CONSULTING ENGINEERS
5940 E. Central, Suite 200 ■ Wichita, KS 67208-4242
Phone 316/683-4111 ■ FAX 316/683-4444

FINAL

Designed By: J. DICKMAN
Drawn By: M. TUCKER
Poe Job No.: 1871A
Date: March 2012

SHT: ST27