GENERAL NOTES

1. APPLICATION. Risers shall be installed to serve all lots or tracts where the sanitary sewer main is below the water table, where the sanitary sewer main depth is greater than 12' below the proposed ground elevation, where the main is adjacent to a pond or wherever service lines would have to cross under storm sewer pipe. Installation of risers because of field conditions shall be as approved by the City Engineer. The location of the risers to serve developed property shall be approved by the property owner and the Construction Engineer.

2. MANHOLE STUB RISERS. Manhole stub risers be installed in manholes where locations of manholes will provide satisfactory service connection as determined by the Construction Engineer. The vertical distance between the flowline of the manhole stub and the flowline of the sanitary sewer line out of the manhole shall not exceed 2' stub. Risers shall be utilized at manholes as indicated in Note 1. Manhole stub riser shall be set such that the top of the stub is not lower than the top of the sanitary sewer line.

3. SIZING. Risers shall be sized according to the plans and riser table where risers are indicated by the plans. Where risers are required because of field conditions, the risers shall be 6" diameter for commercial or industrial properties and 4" or 6" diameter for residential properties, based on lot size and sanitary sewer main depth. Sizing of risers shall be approved by the construction Engineer prior to installation.

4. RISER MATERIAL. Risers shall be constructed of Schedule 40 PVC Pipe, meeting the requirement of the latest revision of A.S.T.M.. All pipe joints shall be solvent welded. Full body tee shall be SDR 26 PVC pipe.

5. ROCK ENCASEMENT. Riser connection to clay pipe sanitary sewers shall be rock encased both ways from the riser centerline. The rock encasement shall extend three feet from the riser centerline or stop at the first sanitary sewer pipe joint within three feet of the riser centerline. Riser connections to PVC Sanitary sewer mains shall be rock encased one foot each way from the riser centerline. Crushed rock shall conform to ASTM C-33, Gradation No. 67, and shall meet all requirements for Portland Cement Concrete pavement Coarse Aggregate, Section 406.2, City of Wichita Standard Specifications.

6. BEDDING. Beyond the limits of the rock encasement, bedding around the sanitary sewer riser shall be compacted Pipe Bedding Type 1 or 2. The bedding shall be placed and compacted from the depth of the sanitary sewer main to the top of the sanitary sewer riser pipe. Compacted Pipe Bedding Type 1 or 2 shall be required for all risers whether constructed in vertical wall or sloped wall trenches. Bedding material and construction practices shall be approved by the Construction Engineer prior to installation.

7. SUPPORT OF RISERS. Sanitary sewer riser pipe shall be supported during trench backfill. The riser pipe shall be held in a vertical position at all times until trench backfill and compaction has been completed. Contractor's methods for supporting and back filling the riser pie shall be approved by the Construction Engineer.

8. PLUGGING. The ends of the riser pipes and manhole stubs shall be plugged using an airtight solvent welded cap or plug. Cap or plug fittings shall be approved by the Construction Engineer prior to installation. Caps or plugs which do not provide an airtight seal will not be accepted.

9. TOP OF THE RISER PIPE. The top elevation of the sanitary sewer riser pipe shall be built per plan elevations, unless otherwise directed by the Construction Engineer. where riser elevations are not shown on the plans, the top of the risers shall be set at an elevation four feet below t he proposed ground surface. If ground water is encountered, the top of the riser pipe shall be set at an elevation 2' (min.) above the maximum water table elevation, regardless of the riser elevation shown on the plans.

10. MARKING. Locations of the ends of the sanitary sewer riser pipe shall be marked by installing 1" PVC from the top of the riser to a minimum of 4' above the top of finished grade. No. 4 rebar shall be placed centered over the riser from the cap to the existing ground. The 1" PVC pipe shall be wrapped with green colored plastic tape, for the full length above ground surface. The green tape shall be 4 mil Polyethylene film with a minimum width of three inches, specifically manufactured for the purpose of identification of underground sewers.

11. LOCATION MEASURES. The project inspector shall record and document the location of all risers constructed as measured from the nearest manhole, indicate the direction from the manhole, the direction and distance from the main, riser size, and elevation of the top of the riser in tabular format.

12. RISER LOCATION. the riser shall be located per plan if shown. If not shown on the plan, the riser shall be located at the center of the lot, within one foot of the property side of the easement for the lot being served. All riser locations shall be approved by the Construction Engineer prior to installation.

13. PAYMENT. "Riser Assembly, Vertical " shall be paid for at the contract unit price per each, which shall be full compensation for all pipe, fittings, marking tape, length of backfill, labor, site restoration, and any other items necessary to complete the work.

"Riser Assembly, Manhole Stub" shall be paid for at the contract unit price per each, which shall be full compensation for all labor material and incidentals necessary to complete the work including all pipe, fittings, rock encasement, and all other items as required and listed for "Riser Assembly, Vertical "

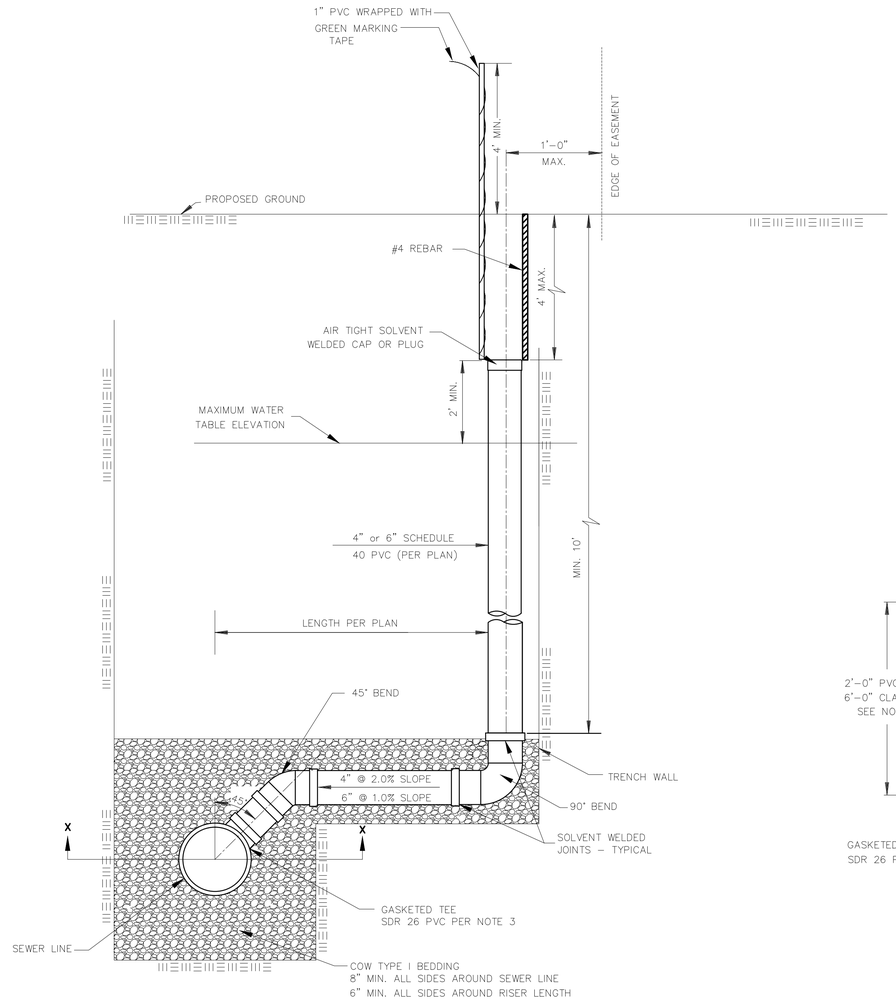

NOTE: RISER PIPE REQUIREMENTS AT MANHOLE STUBS SHALL BE SIMILAR TO THOSE SHOWN ABOVE.

NOTE:
NON SHEAR COUPLING TO BE USED WHEN HOOKING TO CLAY PIPE.

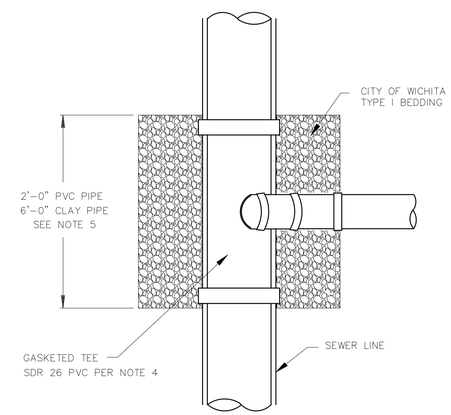

TYPICAL SECTION X-X

CITY OF WICHITA
PUBLIC WORKS & UTILITIES ENGINEERING DIVISION

VERTICAL RISER ASSEMBLY SEWER DETAIL

CITY ENGINEER
JAMES L. ARMOUR, P.E., L.S.

PROJECT NUMBER	OCA NUMBER	DATE
468-84816	624100	03/2012

CITY ENGINEER'S OFFICE
CITY HALL - SEVENTH FLOOR
455 NORTH MAIN STREET
WICHITA, KANSAS 67202-1620
(316) 268-4501

SHEET
361 of 374

SS-103

No.	Date	By	Approved	Revision

13TH STREET NORTH FROM HYDRAULIC TO OLIVER
SANITARY SEWER EXTENSIONS
VERTICAL RISER ASSEMBLY SEWER DETAIL
CITY OF WICHITA, KANSAS
JAMES L. ARMOUR, P.E., L.S. - CITY ENGINEER
C.O.W. Proj# 468-84816 O.C.A.# 624100

POE & ASSOCIATES, INC.
CONSULTING ENGINEERS
5940 E. Central, Suite 200 ■ Wichita, KS 67208-4242
Phone 316/685-4114 ■ FAX 316/685-4444

FINAL

Designed By: JPD
Drawn By: MLT
Poe Job No.: 1871A
Date: March 2012