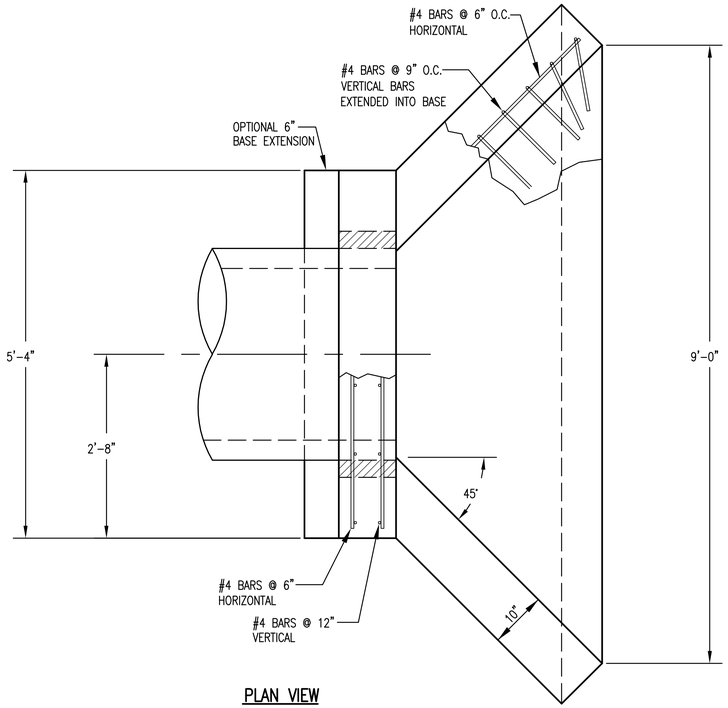


PLAN VIEW

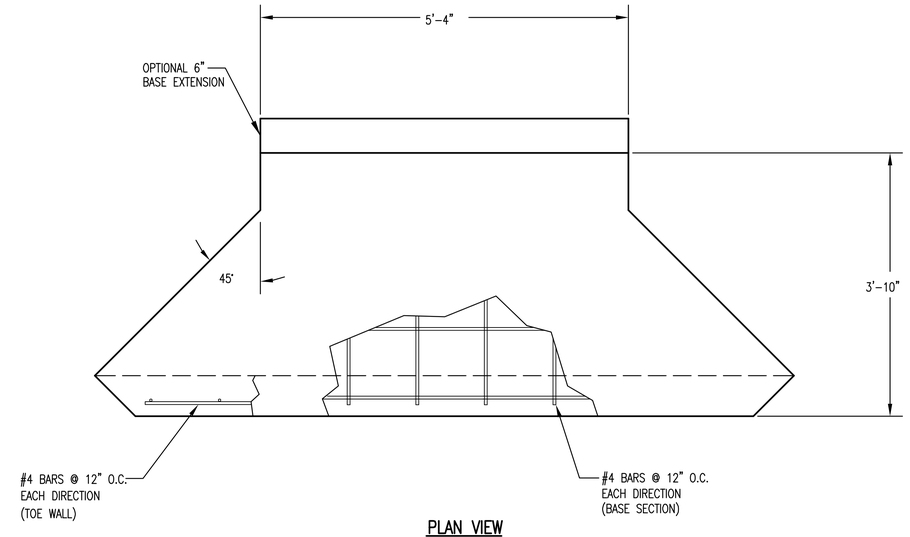


PLAN VIEW
BASE

| PIPE Ø | A | B | BLOCKOUT Ø |
|---|---|---|---|
| 30" | 2'-1" | 1'-3" | 3'-7" |
| 36" | 2'-4" | 1'-6" | 4'-2" |

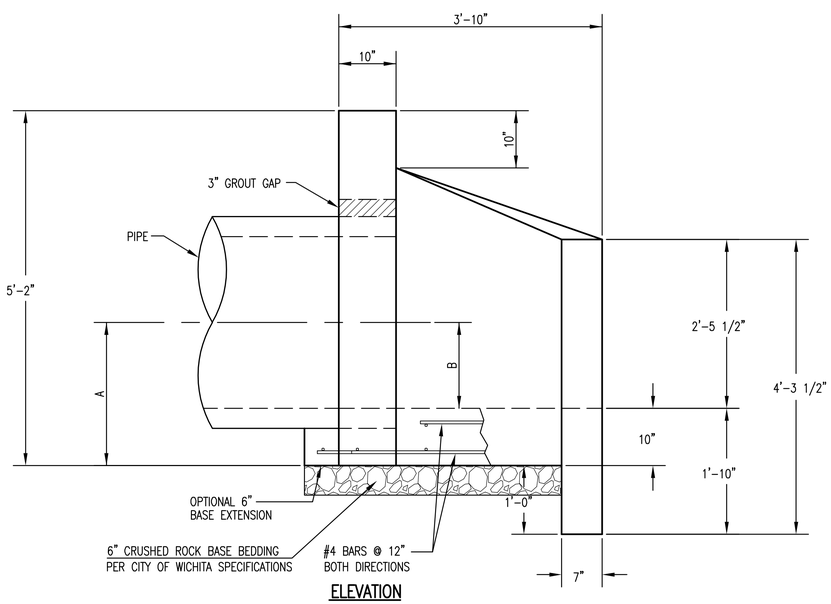


ELEVATION

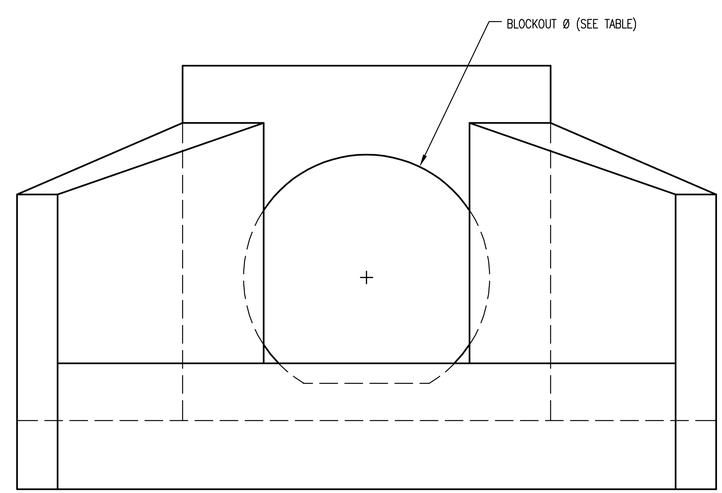


FRONT VIEW

HEADWALLS, AS SHOWN, WILL NOT SUPPORT FLAP GATE.

CITY OF WICHITA
PUBLIC WORKS & UTILITIES
ENGINEERING DIVISION

HEADWALL
DETAILS FOR
30" AND 36" PIPE

INTERIM CITY ENGINEER
GARY L. JANZEN, P.E.

| PROJECT NUMBER | OCA NUMBER | DATE |
|---|---|---|
| 472-84830 | 715727 | 5/2012 |

CITY ENGINEER'S OFFICE
CITY HALL - SEVENTH FLOOR
455 NORTH MAIN STREET
WICHITA, KANSAS 67202-1620
(316) 268-4501

DESIGN | DRAWN

SHEET
65 of 212

J:\Civil\09081\dwg\Details\SW-403-Headwall 30-36 Details.dwg

Saved 10-11-2012 9:20:30 AM by BOGARTJ
Plot Scale 1:1 10-11-2012 10:44:58 AM by JOHN BOGART
J:\Civil\09081\dwg\Details\SW-403-Headwall 30-36 Details

SW-403