STATE	PROJECT NO.	YEAR	SHEET NO.	TOTAL SHEETS
KANSAS	87 N-0519-01	2012	100	212

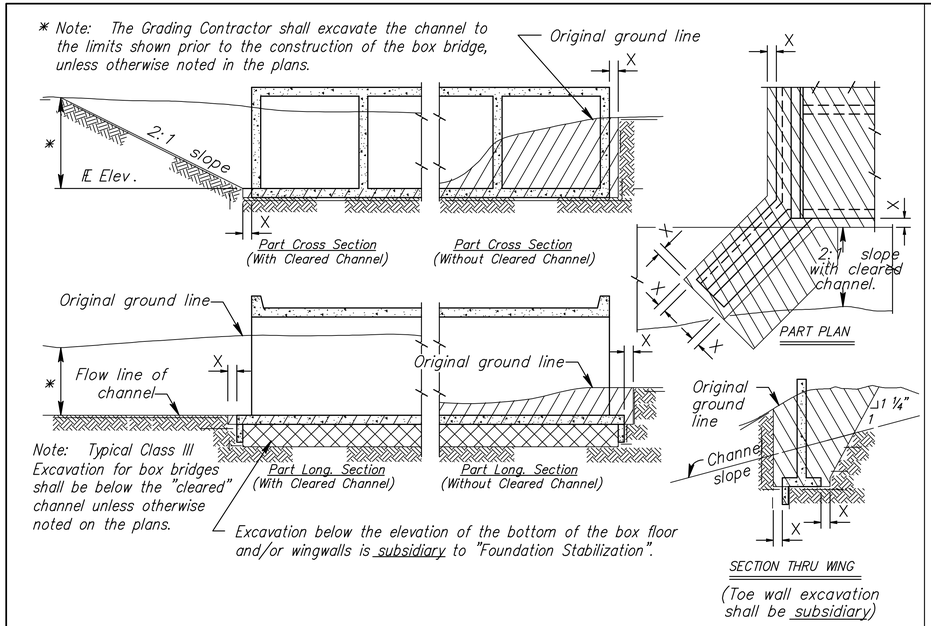

EXCAVATION DETAILS FOR REINFORCED CONCRETE BOX CULVERT

Note: Excavation for culverts less than bridge length shall not be paid for as Class III Excavation but shall be subsidiary to Grade 4.0 Concrete.

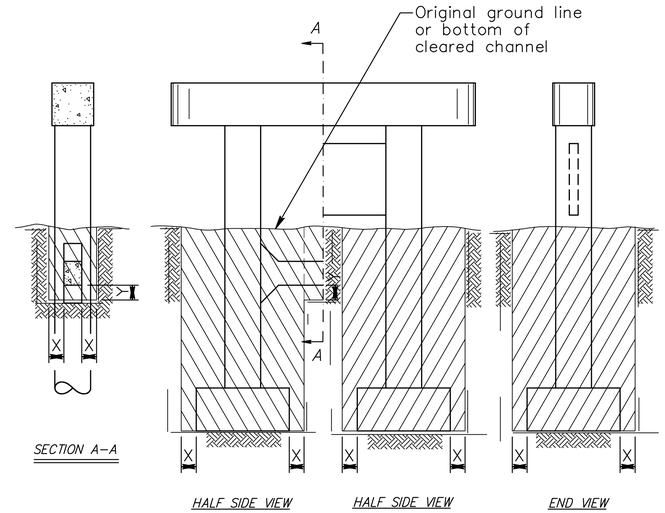

EXCAVATION DETAILS FOR TYPICAL PIERS

See detail when rock or shale (rock) is encountered.❀

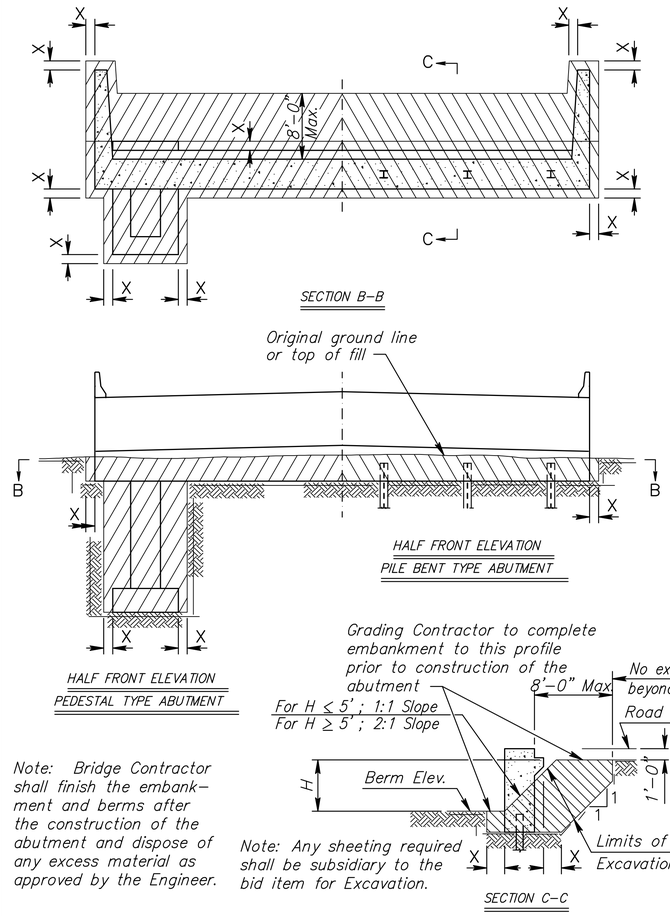

Note: Bridge Contractor shall finish the embankment and berms after the construction of the abutment and dispose of any excess material as approved by the Engineer.

Note: Any sheeting required shall be subsidiary to the bid item for Excavation.

EXCAVATION DETAILS FOR TYPICAL ABUTMENTS

See detail when rock or shale (rock) is encountered.❀

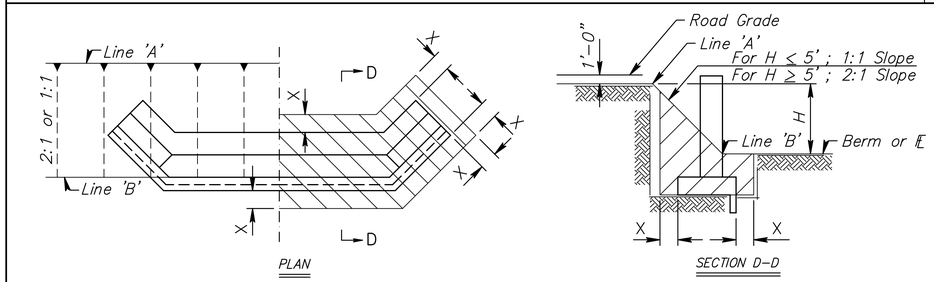

(Toe wall excavation shall be subsidiary)

EXCAVATION DETAILS FOR ABUTMENTS WITH FLARED WINGWALLS

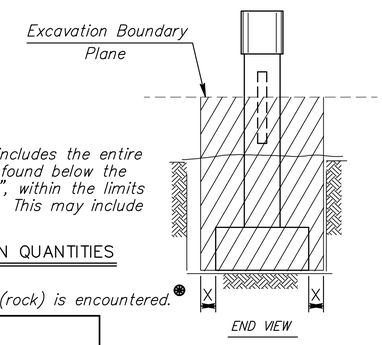

Note: Class II Excavation includes the entire volume of whatever nature found below the "Excavation Boundary Plane", within the limits specified for measurement. This may include water or air.

CLASS II EXCAVATION QUANTITIES

See detail when rock or shale (rock) is encountered.❀

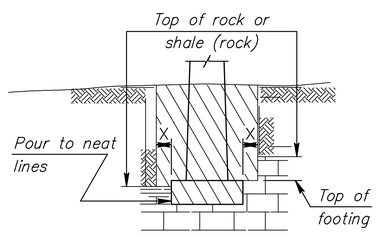

❀EXCAVATION DETAIL FOR FOOTINGS IN ROCK OR SHALE (ROCK)

(Piers and Abutments)

Note: Excavation below top of rock, hard shale or below top of footing, whichever is lower, shall be to neat lines of the concrete construction.

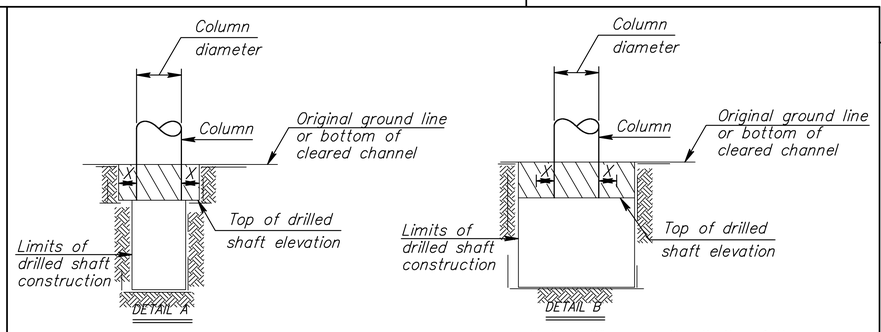

DRILLED SHAFT DETAILS

Note: Whenever the limits of the drilled shaft construction are greater than the Column Diameter + 2X, the limits of Class I, II or III Excavation shall be the limits of the drilled shaft construction. (See Detail B)

Note: All bridge excavation shall be computed on the basis of the cross-hatch areas and boundary lines indicated on this sheet and the Excavation Boundary Plane on the Construction Layout.

Sides of trenches in hard or compacted soil including embankments shall be shored, sheeted, braced or otherwise supported when the trench is more than 5 feet in depth and 8 feet or more in length. In lieu of the shoring, the sides of the trench above the 5 foot level may be sloped to preclude collapse. The slope for average soils shall be 1:1. If the angle of repose of the soil is less, flatter slopes shall be required.

Dimension "X" shall be 2'-0" unless indicated otherwise on the general plans.

Dimension "Y" shall be 1'-6" unless indicated otherwise on the general plans.

J:\Civil\09081\dwg\BRIDGE\09081 BR100B.dwg

NO.	DATE	REVISIONS	BY	APP'D
7	5-15-12	Revised Wing Excavation	JPJ	TLF
6	3-3-10	Revised Wing Excavation	JPJ	TLF
5	10-16-06	Revised "Foundation Stab." Note	JPJ	KFH
4	10-19-04	Concrete - Class to Grade	RAM	KFH
3	4-10-02	Added "Foundation Stab." Note	RAM	KFH
2	8-12-95	Correct Section BB at abutment	LRR	KFH
1	1-30-95	Drilled Shaft Excavation	LRR	KFH

KANSAS DEPARTMENT OF TRANSPORTATION

BRIDGE EXCAVATION (LRFD)

BR100B 100

FHWA APPROVAL		4/17/10	APP'D		TERRY L. FLECK
DESIGNED	DETAILED	RDR	QUANTITIES		CADD
DESIGN CK.	DETAIL CK.	LRR	QUAN. CK.		CADD CK.