FHWA REG NO.	STATE	PROJECT NO.	YEAR	SHEET NO.	SHEETS
7	KANSAS			5	18

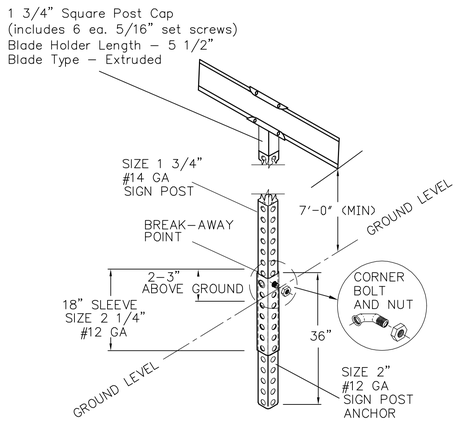

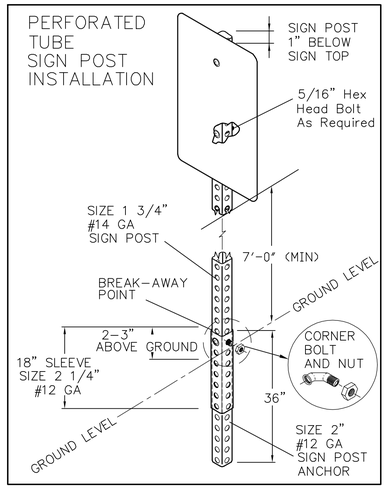

TYPICAL TRAFFIC CONTROL AND STREET NAME SIGN MOUNTING INSTALLATION

CURB AND GUTTER SECTION

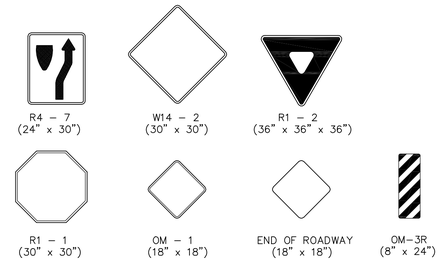

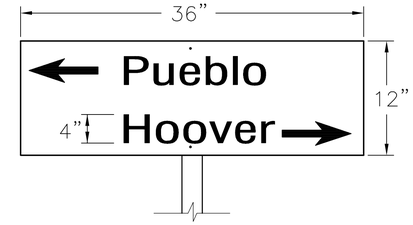

FLAT PLATE STREET NAME SIGN

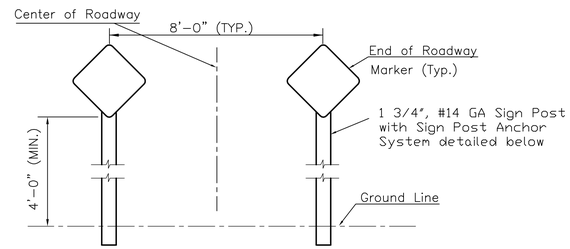

TYPICAL END OF ROADWAY SIGN MOUNTING INSTALLATION

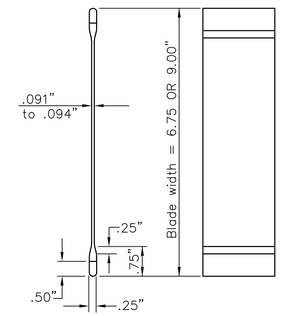

STREET NAME SIGN

BLADE DETAILS

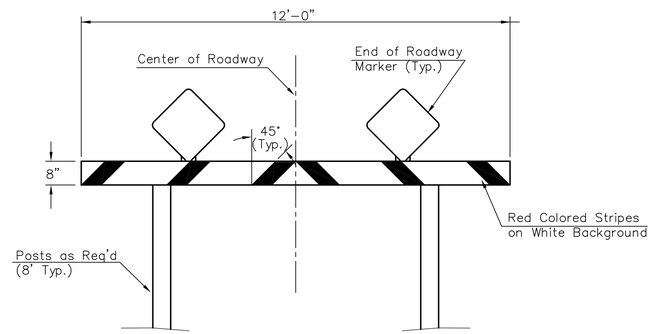

TYPE I BARRICADE DETAIL W/ E.O.R. MARKERS

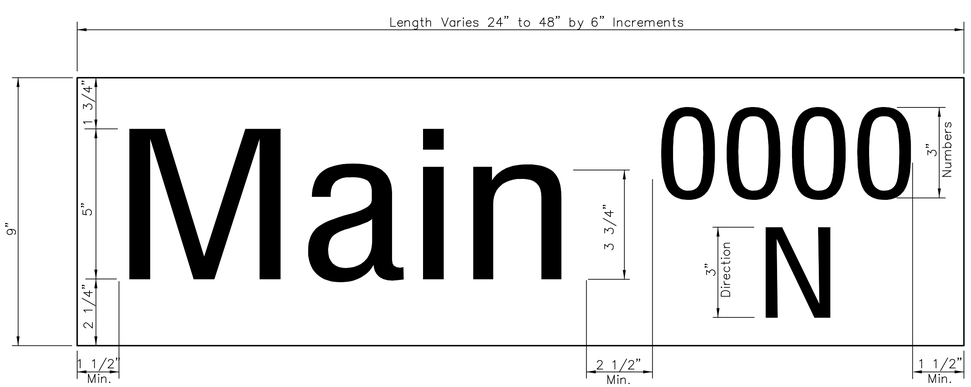

DETAIL A
6 3/4" STANDARD

DETAIL B
9" METRO

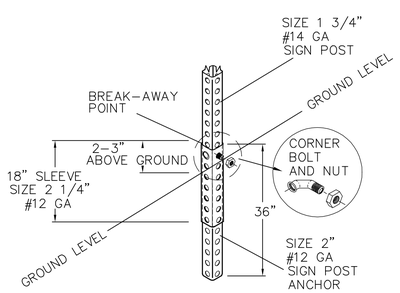

SIGN POST ANCHOR SYSTEM

SIGN ASSEMBLY TABLE

STATION	OFFSET	SIGN	QUANTITY*
2+85.00	19' Rt.	OM-3R	1
13+25.0	25' Rt.	W8-3a	1