STATE	PROJECT NO.	YEAR	SHEET NO.	SHEETS
KANSAS	87 N–0351–01	2012	51	220

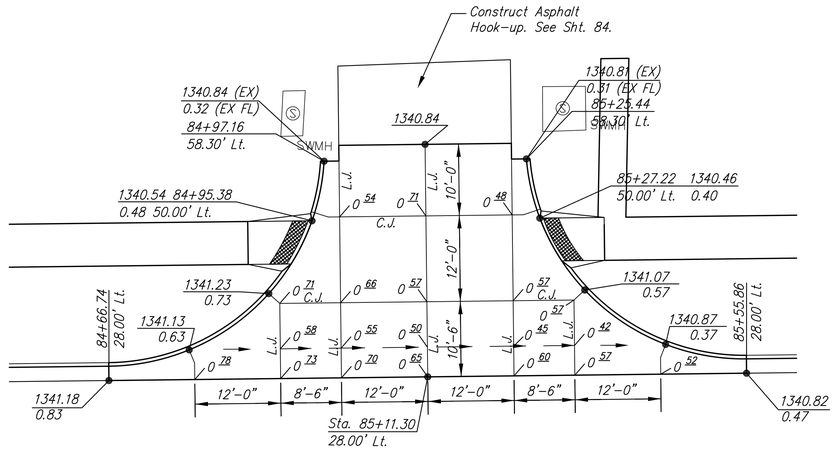

CENTRAL AVE.

85+00

BAY COUNTRY, 28.00' LT.

Scale: 1"=10'

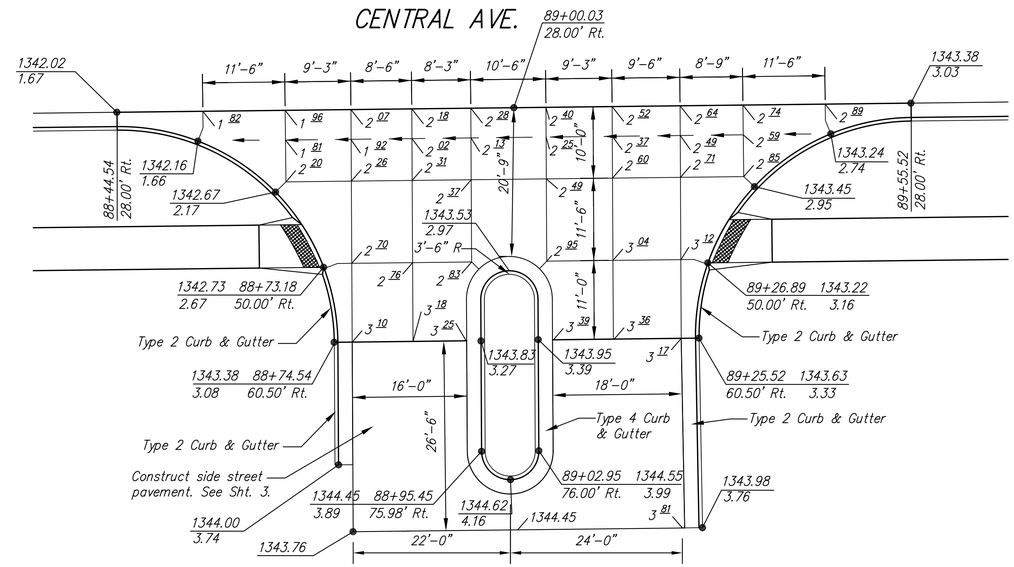

CEDAR DOWNS CIR, 28.00' RT.

Scale: 1"=10'

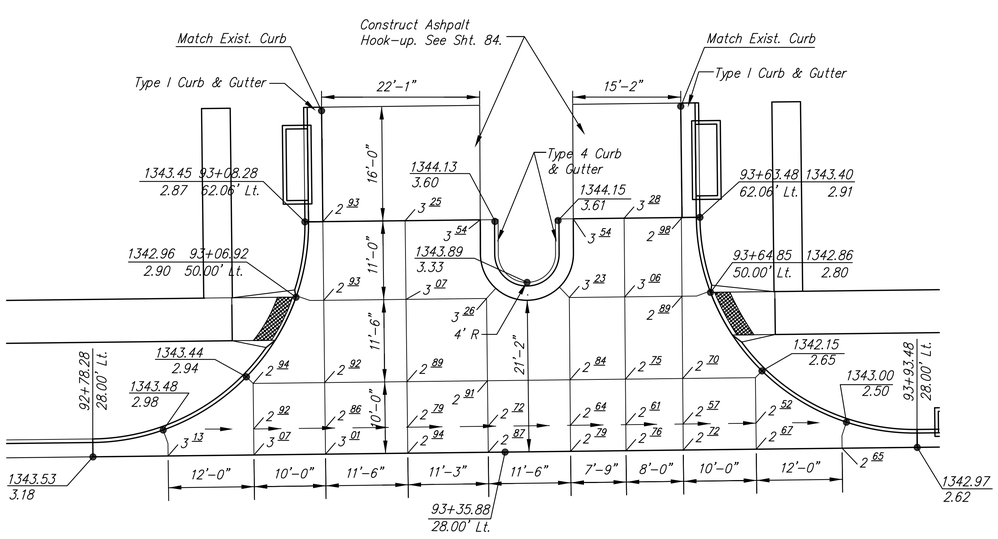

CENTRAL AVE.

93+00

CEDAR PARK, 28.00' LT.

Scale: 1"=10'

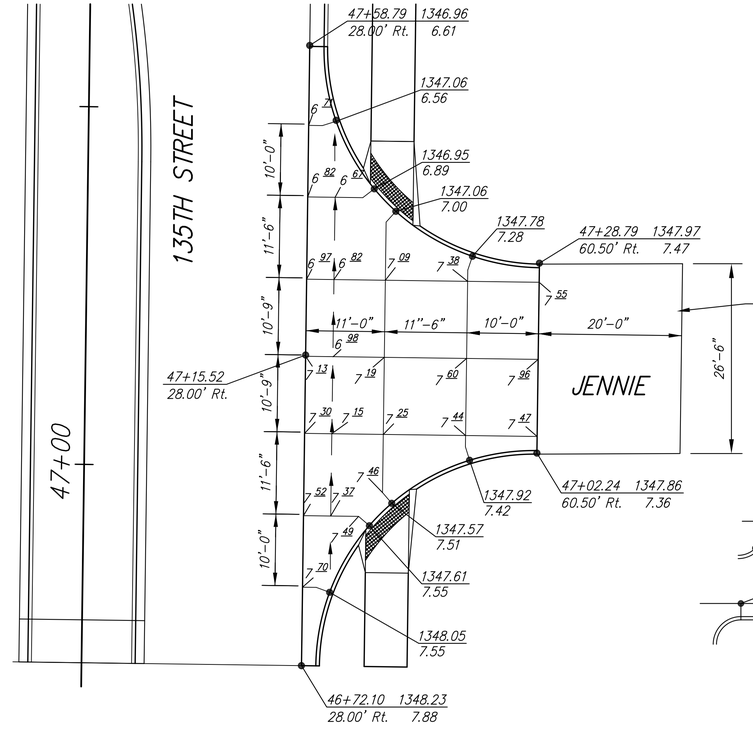

JENNIE, 28.00' RT.

Scale: 1"=10'

N

LEGEND

C.J. Contraction Joint

L.J. Longitudinal Joint

I.J. Isolation Joint

T.J. Tied Construction Joint

D.E.J. Doweled Expansion Joint

Valley Gutter Flow Location

100.00 Back of Curb Elevation
00.00 Flow Line Elevation

100.00 Back of Curb Elevation
00.00 High Edge of Curb Elevation

See Sheet 52 for Valley Gutter Details. See Sheet 3 for Side Road Typical Sections.

MKEC ENGINEERING CONSULTANTS, INC.
411 N. WEBB ROAD
WICHITA, KS. 67206
316 - 684 - 9600

CENTRAL AVENUE IMPROVEMENTS FROM 135TH ST. W. TO 119TH ST. W.

VALLEY GUTTER PLANS

SHEET TITLE

472–84017

PROJECT NUMBER

JRA
DESIGN BY

WNJ
DRAWN BY

JRA
CHECKED BY

ISSUED
November 9, 2012

REVISED

SHEET NO.
51 of 220

J:\Civil\04238\dwg\pos\04238lm13.dwg

PLOTTED: Wednesday, November 14, 2012 @ 01:57PM