STATE	PROJECT NO.	YEAR	SHEET NO.	SHEETS
KANSAS	87 N-0351-01	2012	114	220

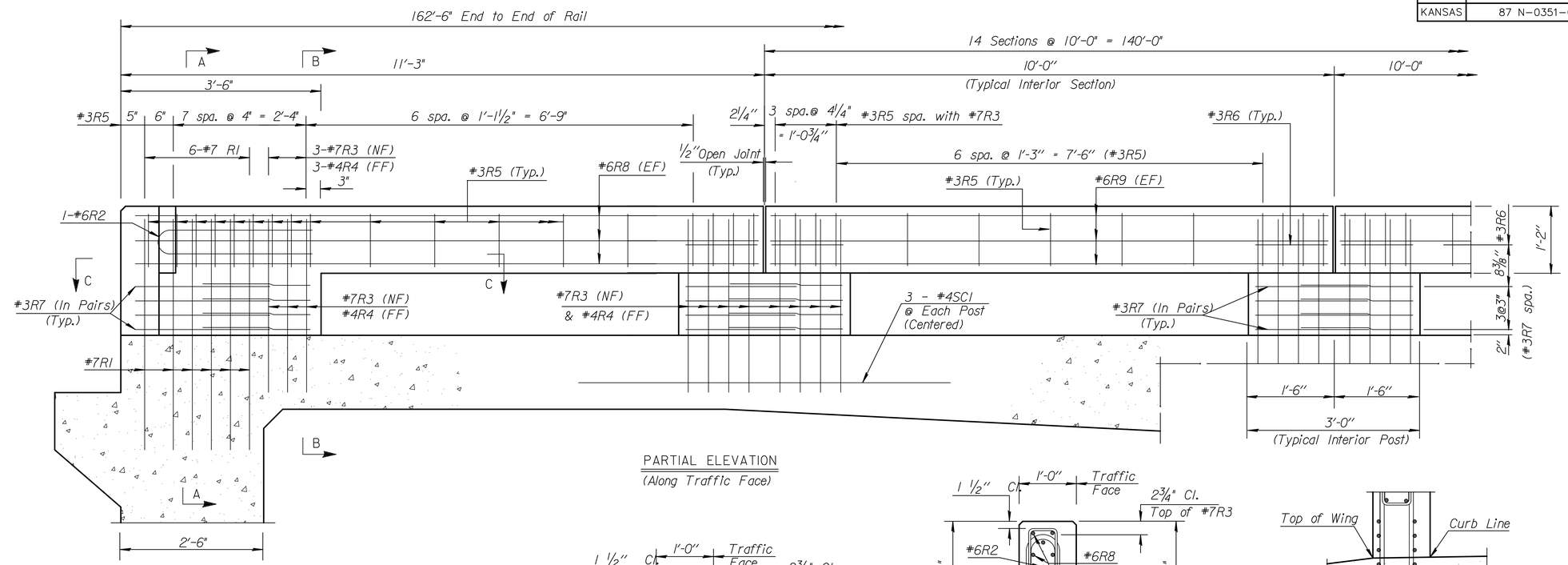

PARTIAL ELEVATION
(Along Traffic Face)

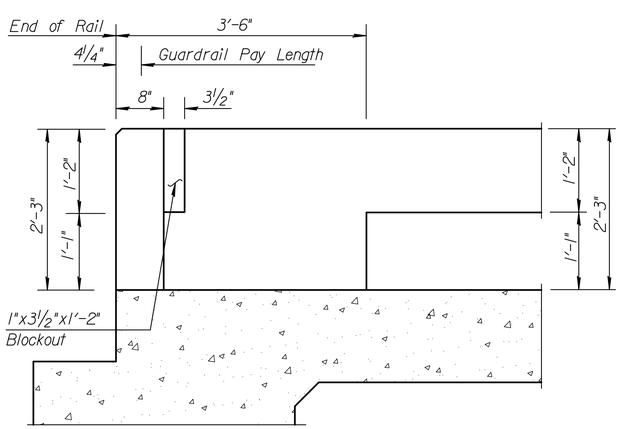

ELEVATION
(Dimensions at traffic face of rail.)

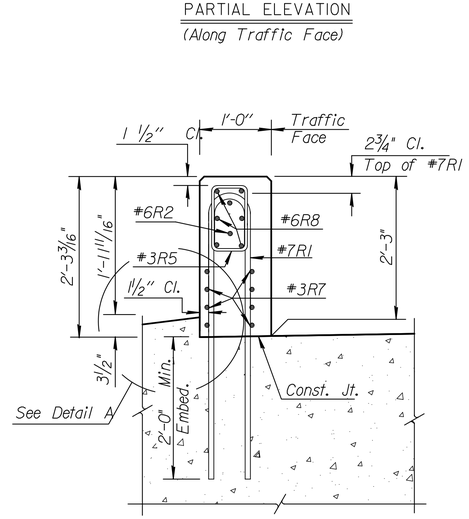

SECTION A-A

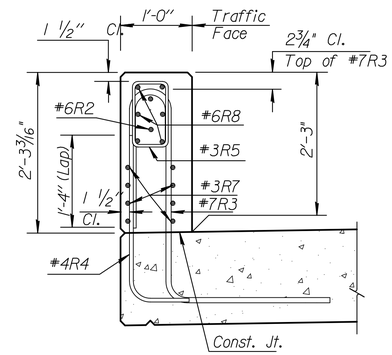

SECTION B-B

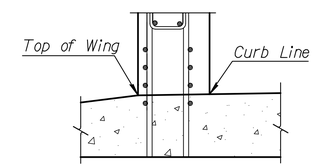

DETAIL A

(For bridges w/o an approach slab curb, detail top of wing at curb line as shown)

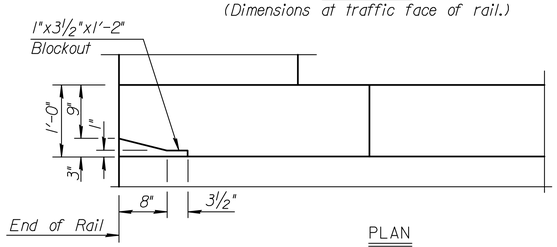

PLAN

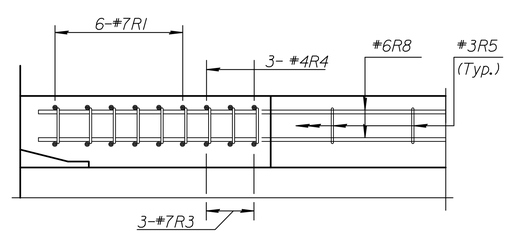

SECTION C-C

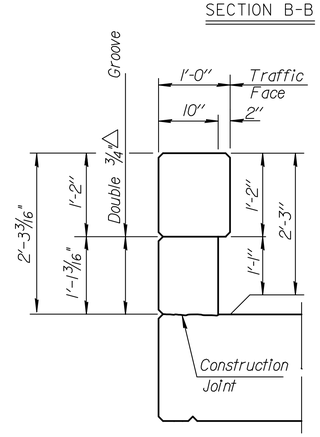

TYPICAL INTERIOR POST

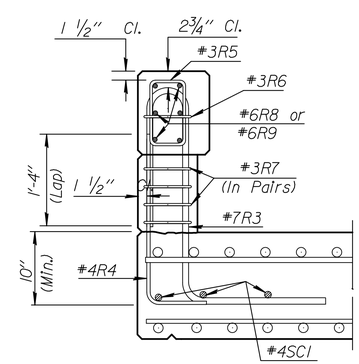

SECTION THRU POST

LEGEND

NF = Near Face
FF = Far Face
EF = Each Face

MKEC ENGINEERING CONSULTANTS, INC.
411 N. WEBB ROAD
WICHITA, KS. 67206
316 - 684 - 9600

JEFF A. GARNER
LICENSED
20245
KANSAS
PROFESSIONAL ENGINEER

CENTRAL AVENUE IMPROVEMENTS FROM 135TH ST. W. TO 119TH ST. W.

135TH ST. WEST BRIDGE CORRAL RAIL DETAILS

SHEET TITLE

472-84017
PROJECT NUMBER

JAG
DESIGN BY

DMU
DRAWN BY

KJS
CHECKED BY

ISSUED
November 9, 2012

REVISED

SHEET NO.
114 of 220

J:\Civil\04238\dwg\Bridge\04238 RAIL_135th.dwg

PLOTTED: Wednesday, November 14, 2012 @ 02:29PM