STATE	PROJECT NO.	YEAR	SHEET NO.	SHEETS
KANSAS	87 N–0351–01	2012	116	220

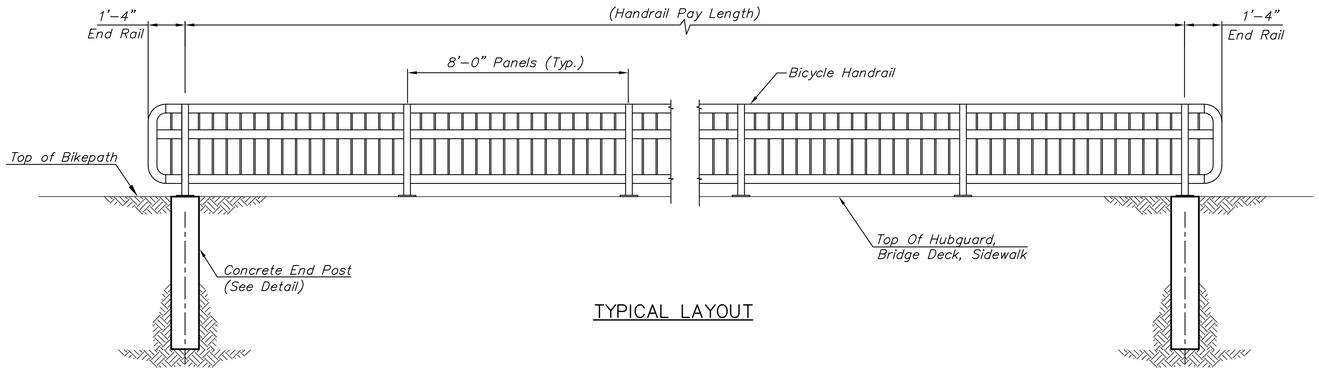

TYPICAL LAYOUT

HANDRAIL NOTES

1. The rail members shall conform to ASTM Designation A36 or equivalent.
2. Rail shall be fabricated in lengths to include a minimum of two and a maximum of three panels. Posts shall be set vertical. Shims may be used between concrete and base plates of posts.
3. All parts of handrail shall be painted. The primer coat shall conform to the inorganic zinc system. Surface preparation shall be in accordance with that for structural steel. The finish coat shall be in accordance with water–borne acrylic finish coat.
4. The Contractor shall submit color chart for approval by the City. The color shall be "black (carboline C900)".
5. All materials, equipment and labor necessary for the installation of the handrail shall be subsidiary to the bid item "Handrail, Bicycle".

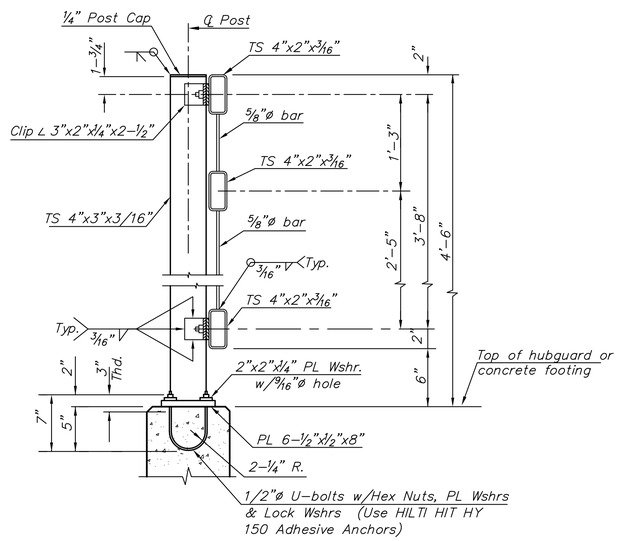

TYPICAL RAIL SECTION

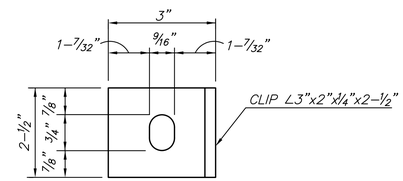

CLIP DETAIL

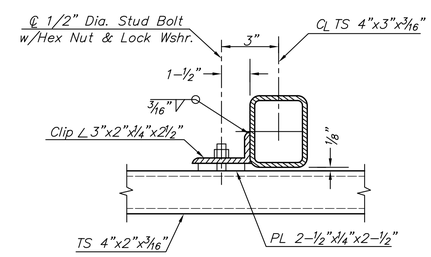

RAIL CONNECTION DETAIL

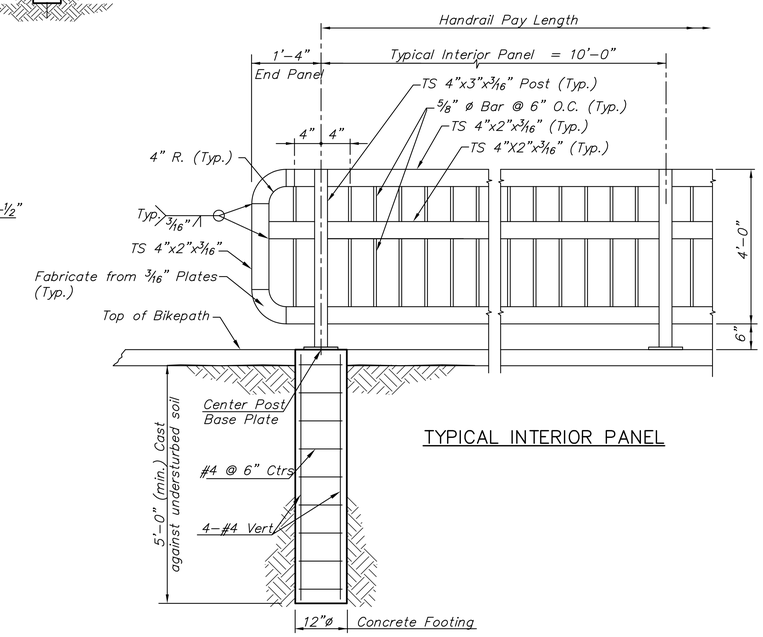

TYPICAL INTERIOR PANEL

CONCRETE FOOTING DETAIL

Concrete Footing shall be Subsidiary to "Handrail, Bicycle". Locate concrete post where specified on plans.

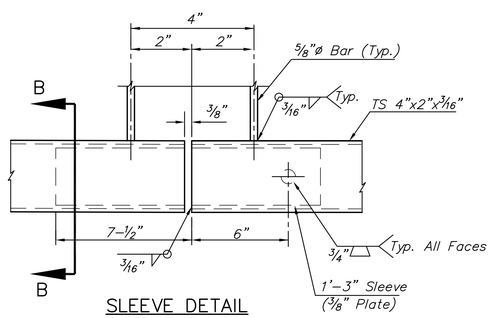

SLEEVE DETAIL

(Bottom Rail Shown, Top Rail Similar)

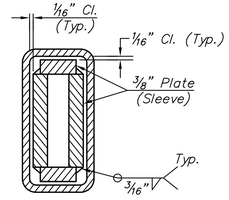

SECTION B–B

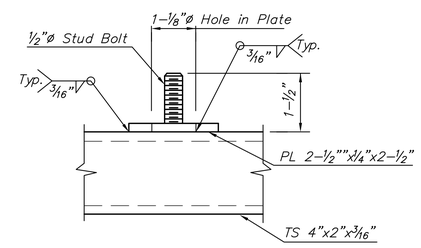

STUD BOLT DETAIL

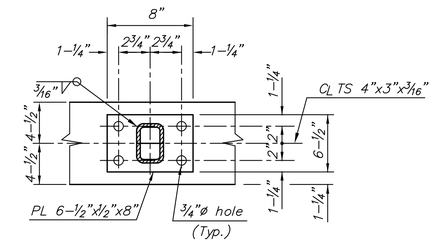

BASE PLATE DETAIL

MKEC ENGINEERING CONSULTANTS, INC.
411 N. WEBB ROAD
WICHITA, KS. 67206
316 - 684 - 9600

CENTRAL AVENUE IMPROVEMENTS FROM 135TH ST. W. TO 119TH ST. W.

HANDRAIL, BICYCLE DETAILS
SHEET TITLE

472–84017
PROJECT NUMBER

JRA
DESIGN BY

JSB
DRAWN BY

JRA
CHECKED BY

ISSUED
November 9, 2012
REVISED

SHEET NO.
116 of 220

J:\Civil\04238\dwg\Details\04238 Bike Rail.dwg

PLOTTED: Wednesday, November 14, 2012 @ 02:29PM