STATE	PROJECT NO.	YEAR	SHEET NO.	SHEETS
KANSAS	87 N-0351-01	2012	143	220

TRAFFIC CONTROL SIGNS & SIGN POST

Station	Location from ℄	R1-1	R2-1	R12-1	R4-7	OM1-3	OM-3	W4-2L	W1-2L	W1-2R	W3-1	R1-3P				Sign Post Length Breakaway 1-3/4"x1-3/4"	Sign Post Length "U"-Channel
CENTRAL AVE.																	
42+30	Lt.		1													10.5'	
43+75	Rt.										1					11.5'	
45+77.14	Lt.					1										7.0'	
46+89.82	Lt.							1								11.5'	
47+00.93	Lt.	1				1						1				10.5'	
47+00.93	Rt.	1										1				10.5'	
48+60.41	Rt.	1				1						1				10.5'	
48+60.41	Lt.	1										1				10.5'	
50+15	Rt.		1													10.5'	
50+61	Lt.										1					11.5'	
57+65.83	Rt.					1										7.0'	
60+49.38	Rt.					1										7.0'	
63+70.09	Rt.					1										7.0'	
64+65	Rt.	1														10.5'	
70+78.86	Rt.					1										7.0'	
71+95.59	Rt.					1										7.0'	
73+04.22	Lt.		1													10.5'	
73+87.67	Rt.	1														10.5'	
74+88	Rt.		1													10.5'	
77+00.18	Rt.					1										7.0'	
78+31.07	Rt.					1										7.0'	
79+67.07	Rt.					1										7.0'	
80+43.04	Rt.					1										7.0'	
84+39.97	Rt.				1	1										10.5'	
84+80.98	Lt.	1														10.5'	
84+82.87	Rt.	1														10.5'	
85+73.27	Rt.					1										7.0'	
88+45.67	Rt.					1										7.0'	
88+89.87	Rt.				2	2										10.5'	
89+42	Rt.	1														10.5'	
92+87	Lt.	1														10.5'	
93+39.26	Lt.				2	2										10.5'	
94+95.54	Lt.		1													10.5'	
135TH STREET																	
42+82	Lt.			1												10.5'	
44+76	Lt.		1													10.5'	
46+70	Rt.										1					11.5'	
46+80.27	Rt.					1										7.0'	
47+45	Rt.	1														10.5'	
49+04	Lt.							1								11.5'	
49+20.32	Lt.	1				1						1				10.5'	
49+20.32	Rt.	1										1				10.5'	
50+74	Lt.	1										1				10.5'	
50+80	Rt.							1								11.5'	
52+82	Rt.						1									8.0'	
52+82	Lt.						1									8.0'	
53+02	Lt.										1					11.5'	
53+42.89	Rt.		1													10.5'	
JENNIE STREET																	
	Rt.								1							11.5'	
12+46	Rt.										1					11.5'	
10+81.40	Lt.									1						11.5'	
TOTAL		14	7	1	5	21	2	3	1	1	5	7				52	

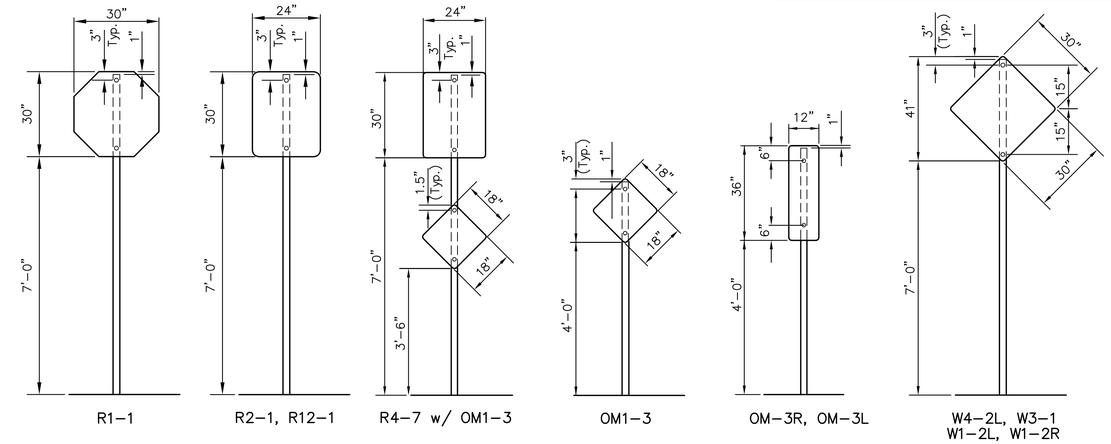

SIGN MOUNTING DETAILS

SIGN POST LENGTH SUMMARY

BREAKAWAY SIGN POST:	
1 3/4"x1 3/4"x LENGTH	EACH
7.0'	13
8.0'	2
10.5'	27
11.5'	10
2-1/4"x2-1/4"x18"	52
2"x2"x36"	52
U-CHANNEL	
LENGTH	EACH
STUBS 3'	
POSTS 8'	
POSTS 9'	
POSTS 9-1/2'	
POSTS 11'	

RECAPITULATION OF MATERIALS

ITEMS	TOTAL	UNIT
Sign Face, (High Intensity HA Reflective Sheeting)	258.5	S.F.
Steel "U" Channel Sign Post		L.F.
Breakaway Sign Post, 1-3/4" x 1-3/4"	463.5	L.F.
Breakaway Anchor Sleeve, 2-1/4" x 2-1/4" x 18"	78.0	L.F.
Breakaway Sign Post Anchor, 2" x 2" x 36"	156.0	L.F.

NOTE: ALL LETTER, NUMBER, & SYMBOL SIZES, SPACING, AND COLORS AND SHALL CONFORM TO THE CURRENT "MANUAL ON UNIFORM TRAFFIC CONTROL DEVICES."

ALL SIGN MATERIAL TO BE 0.080" ALUMINUM.

SIGN DESCRIPTION

CLASSIFICATION	TYPE	SIZE	AREA
R1-1	STOP SIGN	30"x30"	5.18 SQ. FT.
R1-3P	ALL WAY	18"x6"	0.75 SQ. FT.
R2-1	SPEED LIMIT	24"x30"	5.00 SQ. FT.
R12-1	WEIGHT LIMIT	24"x30"	5.00 SQ. FT.
R4-7	KEEP RIGHT	24"x30"	5.00 SQ. FT.
OM1-3	OBJECT MARKER	18"X18"	2.25 SQ. FT.
OM-3	OBJECT MARKER	12"X36"	3.00 SQ. FT.
W4-2L	MERGE LEFT	30"x30"	6.25 SQ. FT.
W1-2L	CURVE LEFT	30"x30"	6.25 SQ. FT.
W1-2R	CURVE RIGHT	30"x30"	6.25 SQ. FT.
W3-1	STOP AHEAD	30"x30"	6.25 SQ. FT.

RECAPITULATION OF MATERIALS

BID ITEMS	TOTAL	UNIT
Signing, Except Street Name Signs	LUMP SUM	L.S.

PAVEMENT INSTALLATION SEQUENCE

1. SIGN POST ANCHOR DRIVEN INTO SUBGRADE PRIOR TO THE PLACEMENT OF THE PAVEMENT.
2. ANCHOR SLEEVE DRIVEN INTO SUBGRADE OVER THE SIGN POST ANCHOR PRIOR TO THE PLACEMENT OF THE PAVEMENT.
3. INSERT SIGN POST INTO THE SIGN POST ANCHOR AND BOLT IN PLACE.

GROUND INSTALLATION SEQUENCE

1. SIGN POST ANCHOR DRIVEN INTO THE GROUND.
2. ANCHOR SLEEVE DRIVEN INTO THE GROUND OVER THE SIGN POST ANCHOR.
3. INSERT SIGN POST INTO THE SIGN POST ANCHOR AND BOLT IN PLACE.

NOTE: IN ALL INSTALLATIONS THE FIRST HOLE ABOVE THE FINISHED GRADE LEVEL IN ALL THREE UNITS MUST BE IN LINE FOR INSERTION OF THE BOLT.

ALL BOLTS AND NUTS FOR FASTENING THE SIGNS AND SIGN POST ASSEMBLY SHALL COMPLY WITH SECTION 1614 AND ALL WASHERS SHALL COMPLY WITH SECTION 1614 OF THE STANDARD SPECIFICATION FOR STATE ROAD AND BRIDGE CONSTRUCTION (1990 EDITION) AND SHALL BE SUBSIDIARY ITEM.

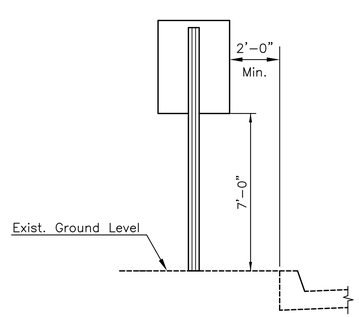

SIGN INSTALLATION - CURBED STREET

Note: If sign is to be installed adjacent to a non-curb street, adjustments may need to be made to sign height and location as directed by the engineer.

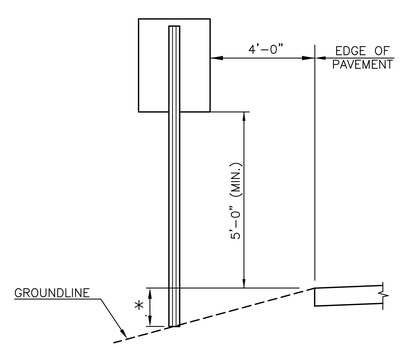

SIGN INSTALLATION NON-CURBED STREET

* ASSUMED TO BE 2'-0" FOR MOST LENGTH CALCULATIONS. CONTRACTOR TO VERIFY.

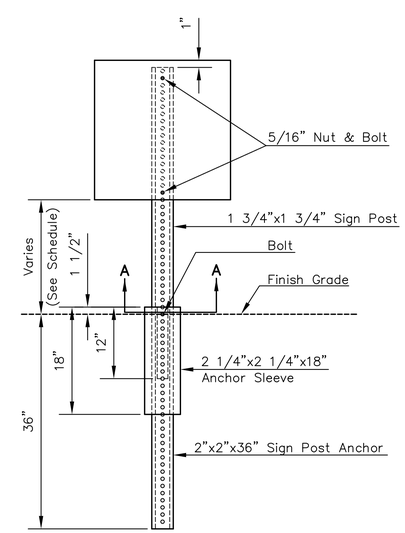

ELEVATION

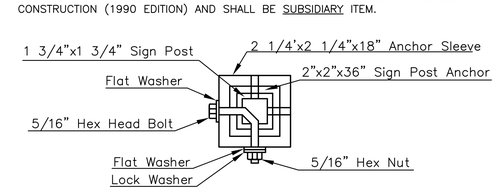

SECTION A-A

BREAK-AWAY SIGN POST DETAIL

MKEC ENGINEERING CONSULTANTS, INC.
411 N. WEBB ROAD
WICHITA, KS. 67206
316 - 684 - 9600

CENTRAL AVENUE IMPROVEMENTS FROM 135TH ST. W. TO 119TH ST. W.

TRAFFIC SIGN DETAILS
SHEET TITLE

472-84017
PROJECT NUMBER

JRA
DESIGN BY

WNJ
DRAWN BY

JRA
CHECKED BY

ISSUED
November 9, 2012
REVISED

SHEET NO.
143 of 220

J:\Civil\04238\dwg\MARK-SIGN\04238 Sign Dtls 02.dwg

PLOTTED: Wednesday, November 14, 2012 @ 02:24PM