PROJECT NO.	YEAR	SHEET NO.	TOTAL SHEETS
472-84817 PHASE II	2011	4	93

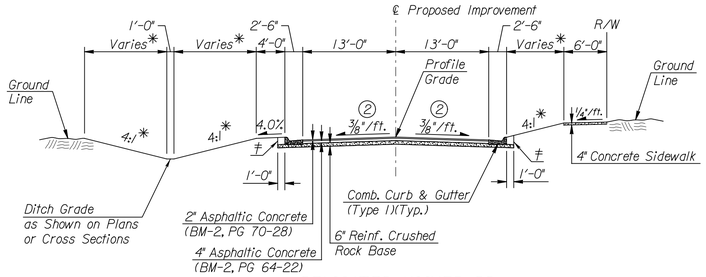

RELOCATED HOOVER RD
STA. 20+00.00 TO STA. 22+55.00
(No Dt. Lt. STA. 21+13 TO Ent. STA. 21+80)

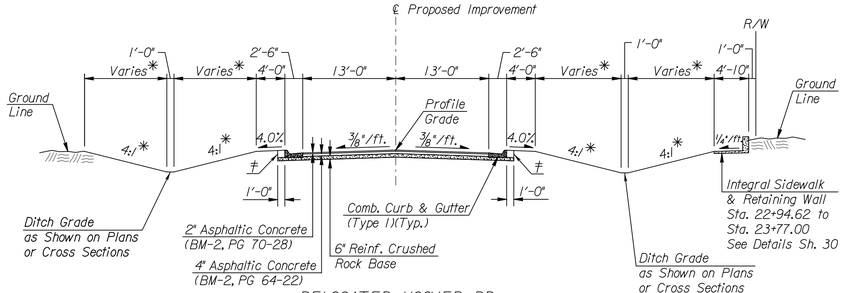

RELOCATED HOOVER RD
STA. 22+55.00 TO STA. 23+64.00

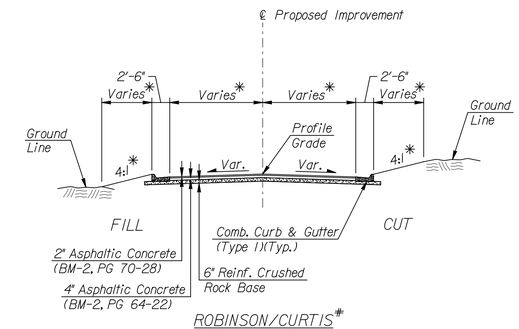

ROBINSON/CURTIS#

#Portions of Robinson/Curtis use similar section with 6" SA-I gravel surfacing and no curb & gutter.
See Vally Gutter Details Sh. No. 28 for Edminster St. section.

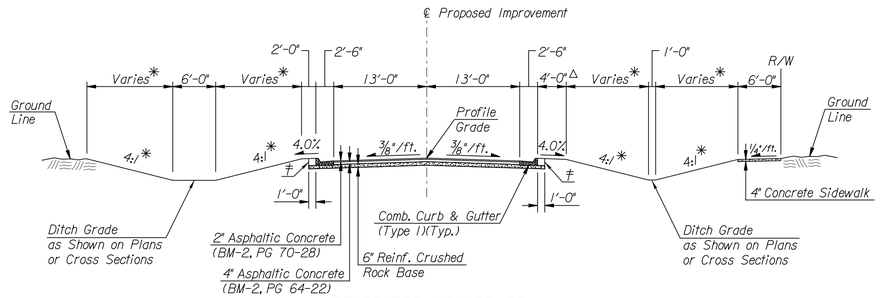

RELOCATED HOOVER RD
STA. 23+64.00 TO STA. 26+70.00
STA. 33+90.00 TO STA. 37+00.00

△ 2-0" from STA. 33+90.00 TO STA. 37+00.00

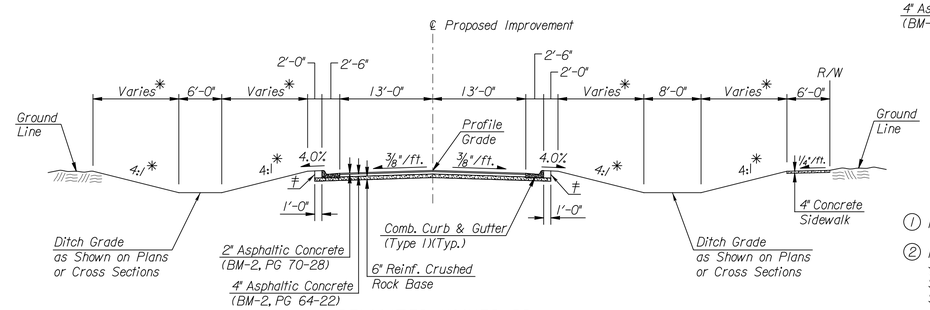

RELOCATED HOOVER RD
STA. 26+70.00 TO STA. 30+30.00

(1) Relocated Hoover Rd.: Varies from 13' at Sta. 50+44 to 16' at Sta. 51+06.

(2) Relocated Hoover Rd.: NB cross slope varies from 0.24% at Sta. 20+00 to 3/8"/ft. at Sta. 20+70. SB cross slope is 0.98% from Sta. 20+00 to Sta. 20+18.11 and varies from 0.98% at Sta. 20+18.11 to 3/8"/ft. at Sta. 20+70.

(3) Relocated Hoover Rd.: NB cross slope varies from 3/8"/ft. at Sta. 51+00 to 2.81% at Sta. 51+14. SB cross slope varies, see Superelevation Transition Diagram on Sh. 5 and Relocated Hoover Profile Sheet for exact cross slopes and locations.

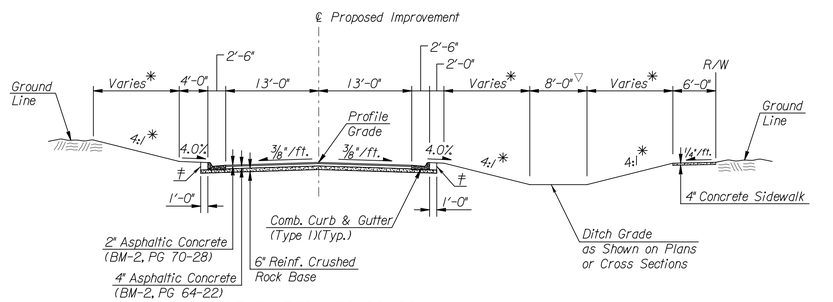

RELOCATED HOOVER RD
STA. 30+30.00 TO STA. 33+90.00

▽ 1'-0" from STA. 32+50.00 TO STA. 33+90.00

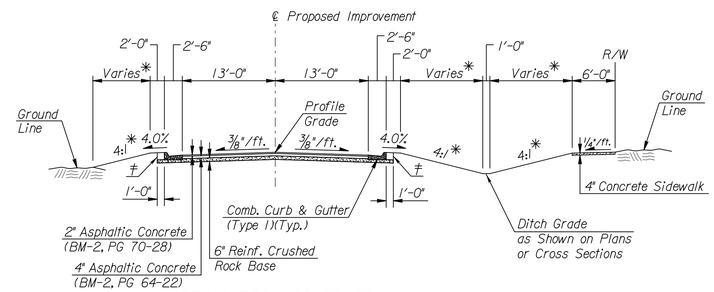

RELOCATED HOOVER RD
STA. 37+00.00 TO STA. 46+80.00

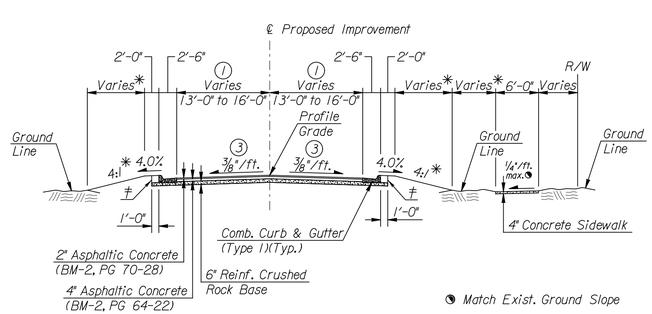

RELOCATED HOOVER RD
STA. 46+80.00 TO STA. 51+14.00

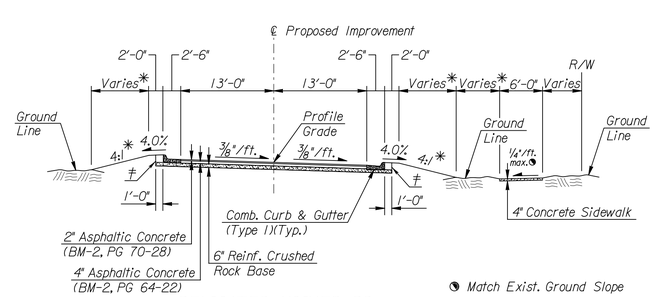

RELOCATED HOOVER RD
SUPERELEVATED SECTION
P.I. STA. 49+00.45

NOTES:

Intersection of all slope lines shall be softened and rounded for pleasing appearance.

The sections as shown are typical. See plan details for variations.

* Dimensions and slopes for standard ditches and fills. See plan and cross sections for variations.

† Backfill behind curb. Quantities for this work are included in the "Earthwork Summary Table".

Fabric base reinforcement shall be B x 1100 geogrid as manufactured by Tensar Corporation or approved equal. Fabric base reinforcement shall be installed in accordance with manufacturer's recommendations. Crushed rock shall be uniformly graded from 1½" maximum size to not more than 10% passing a No. 200 sieve. Rock quality shall be the same as specified for coarse aggregate for concrete mixes.

Rock base is to be compacted and smoothed with a steel faced roller prior to placement of asphalt. Tack coat will not be applied to rock base.

A tack coat of emulsified asphalt (SC-1H or CSS-1H) shall be applied at an approximate rate of 0.05 gallons per square yard between each lift of asphaltic material.

Bituminous base and asphaltic concrete wearing surface shall be placed with a laydown machine having automatic controls for line and grade.

Construction joints in each lift shall be staggered a minimum distance of one (1) foot from joints in preceding lifts and placed so that a joint will be constructed on the centerline of the top lift.

The asphaltic concrete pavement between the combined curb and gutter shall be paid as square yards of "AC Pavement 6" (4" Bit Base)(BM-2)".

HNTB

CITY OF WICHITA
PUBLIC WORKS & UTILITIES ENGINEERING DIVISION

TYPICAL SECTIONS

CITY ENGINEER
JAMES L. ARMOUR, P.E., L.S.

PROJECT NUMBER	OCA NUMBER	DATE
472-84817 PHASE II	770005	11/2011

CITY ENGINEER'S OFFICE
CITY HALL - SEVENTH FLOOR
455 NORTH MAIN STREET
WICHITA, KANSAS 67202-1620
(316) 268-4501

DESIGN | DRAWN

SHEET 4 of 93

Plotted on: Monday October 24, 2011 09:27 AM
mbechtel Plot Queues: \\cvpw00\PLTBW_IP
Plot Scale: 10.000000:0.000000 Pen Tables: \\cvpw00\Jobs\4809\Common\Highway\Library\plotpen\CC_22x36.pen
Design Filename: \\cvpw00\Jobs\4809\Hoover\CD\Detail\Hwy-typicals.dgn

\\cvpw00\Jobs\4809\Hoover\CD\Detail\Hwy-typicals.dgn