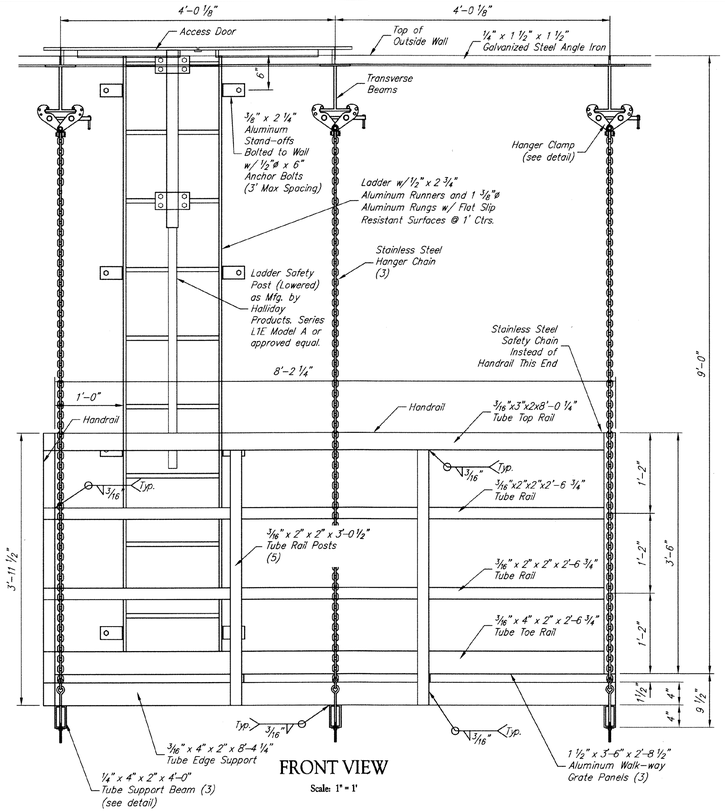

FRONT VIEW

Scale: 1" = 1'

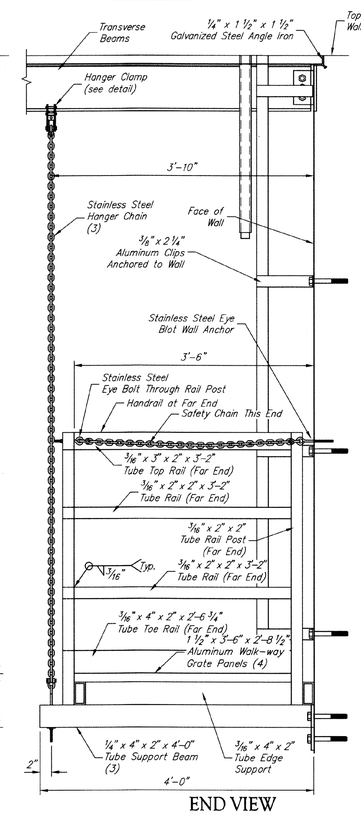

END VIEW

Scale: 1" = 1'

CATWALK DETAILS

Scale: 1" = 1'

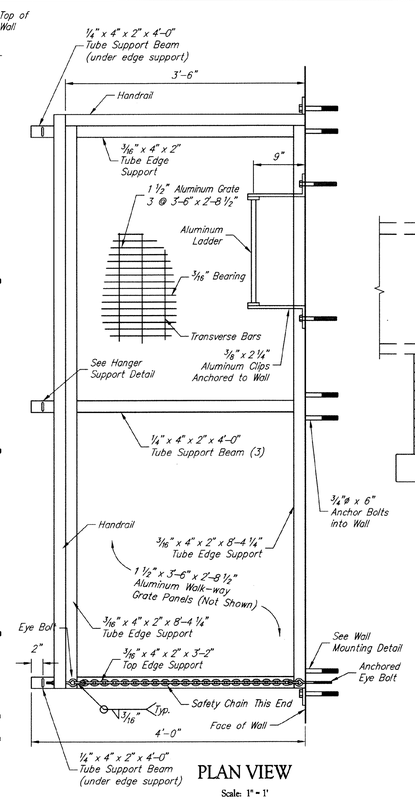

PLAN VIEW

Scale: 1" = 1'

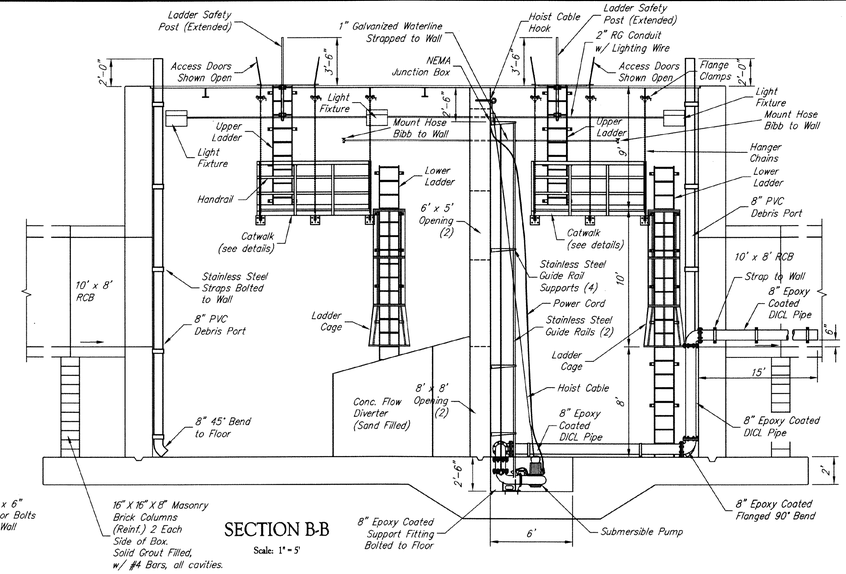

SECTION B-B

Scale: 1" = 5'

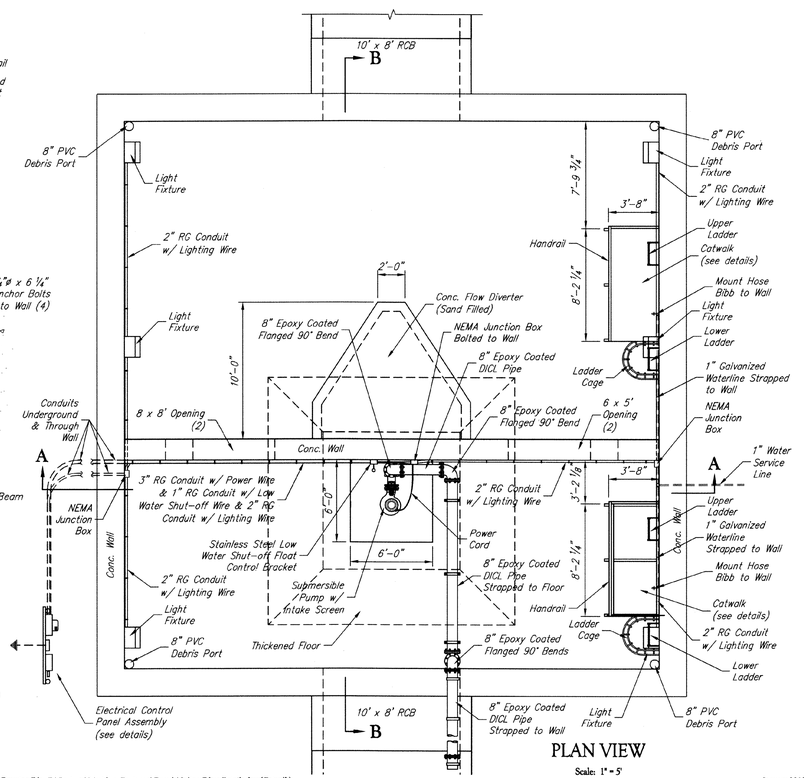

PLAN VIEW

Scale: 1" = 5'

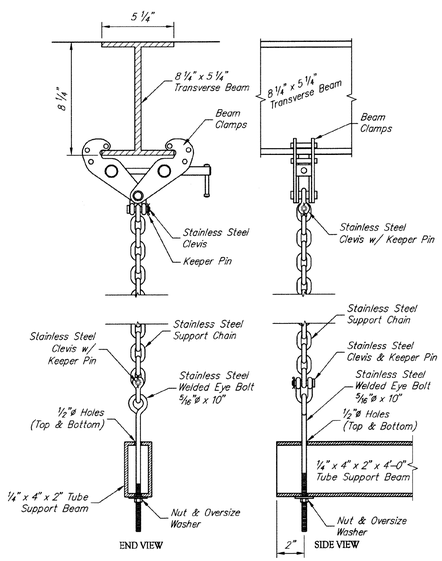

SUPPORT HANGER DETAILS

Scale: 1" = 5'

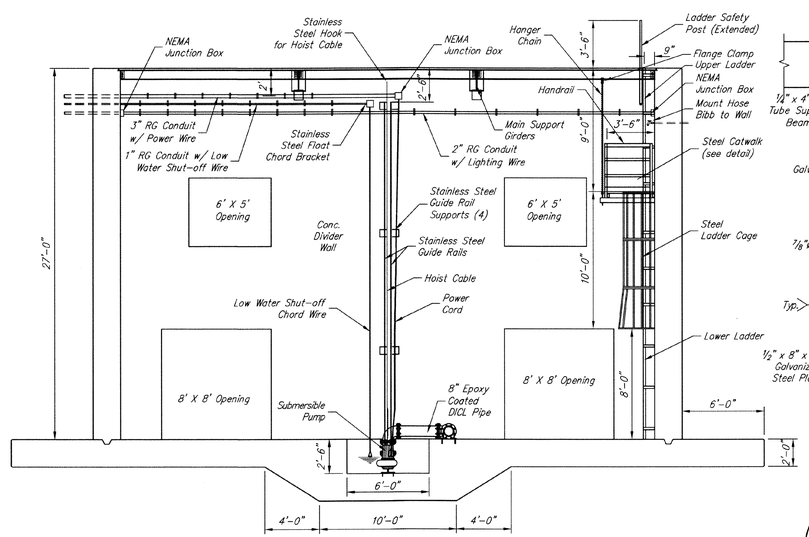

SECTION A-A

Scale: 1" = 5'

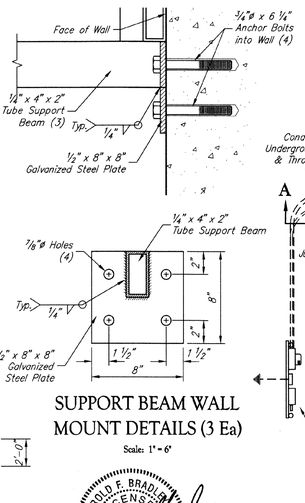

SUPPORT BEAM WALL MOUNT DETAILS (3 Ea)

Scale: 1" = 6"

GERALD F. BRADLEY JR. LICENSED 18076 1/24/13 KANSAS PROFESSIONAL ENGINEER

Drawing File: E:\Projects\Meridian Drainage\Details\Inline Filter Details.dwg [Catwalk]

Design: KEK Drawn: JAK Approved: JFB Scale: NOTED	Project No. 0802-E038 CAPITAL IMPROVEMENT PROJECT DEBRIS REMOVAL STRUCTURE CATWALK, PLUMBING & FIXTURE DETAILS MERIDIAN AVENUE DRAINAGE OUTFALL PROJECT	Baughman Company, P.A. 315 Ellis St. Wichita, KS 67211 P 316-262-7271 F 316-262-0149 Baughman ENGINEERING | SURVEYING | PLANNING | LANDSCAPE ARCHITECTURE	January 2013 SHEET 100 OF 119