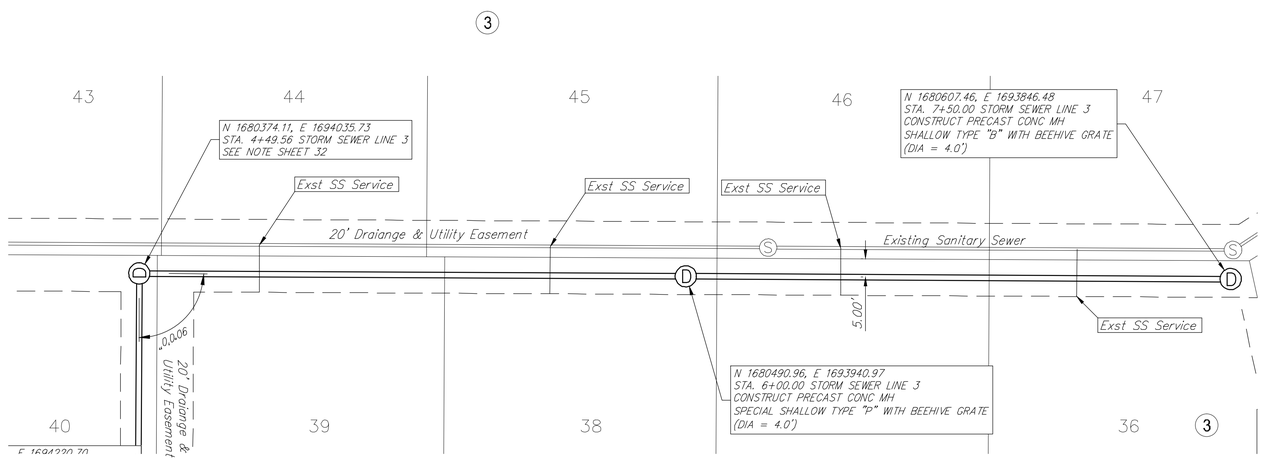

Bellechase 3rd Addition

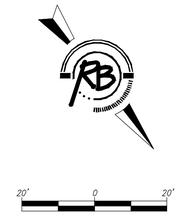

Bellechase 2nd Addition

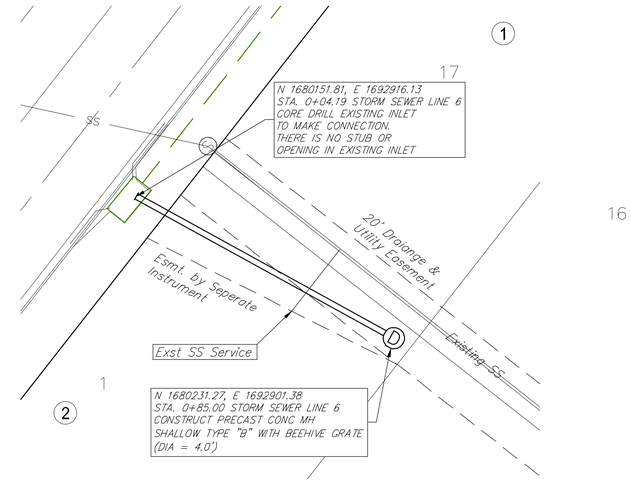

Bellechase 3rd Addition

2

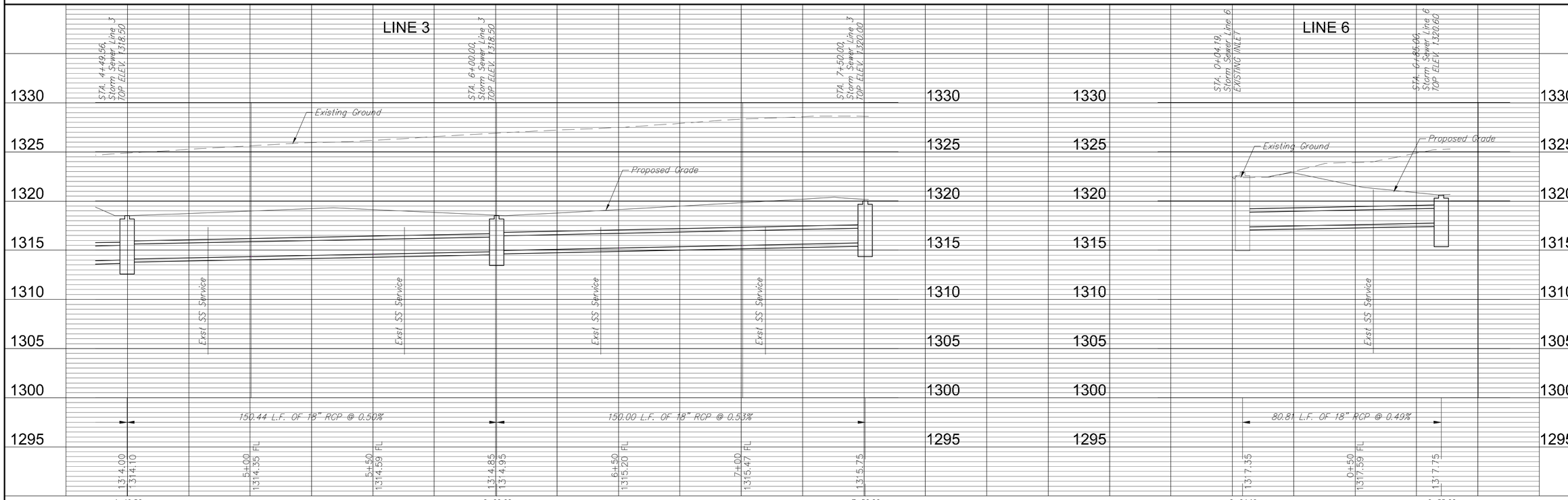

RUGGLES BOHM
ENGINEERING | SURVEYING | LANDSCAPE ARCHITECTURE | ENVIRONMENT
8141 NORTH MAIN · WICHITA, KANSAS 67205 · PHONE 316-838-8888 · FAX 316-838-8822
WWW.RUGGLESBOHM.COM

DESIGN	EJG
DRAWN	EJG
REVISED	
UTILITY	
DATE	June 25, 2013
REVIEW	
PROJECT NUMBER	472-85078
DRAWING FILE	Engg Base 1SWS Line 3&6

Bellechase 3rd Addition
SWS Line 3 & 6
WICHITA, KANSAS

RB JOB 4057E

SHEET 33 OF 45