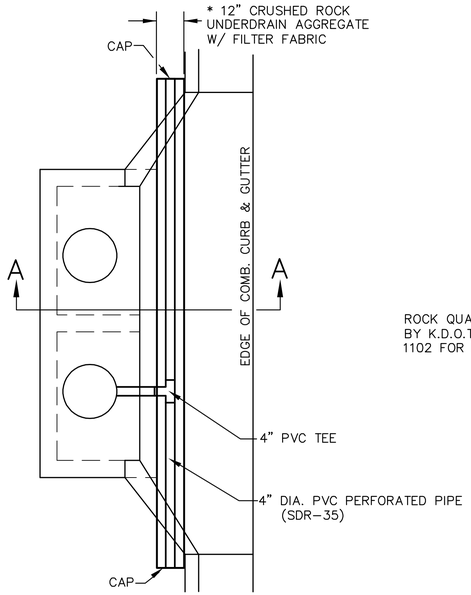

PLAN

* UNDERDRAIN AGGREGATE
PERCENT OF AGGREGATE RETAINED

1"	0
3/4"	0 to 10
3/8"	45 to 80
#4	90 to 100
#8	95 to 100

ROCK QUALITY SHALL CONFORM TO THE REQUIREMENTS SPECIFIED BY K.D.O.T. 1990 EDITION STANDARD SPECIFICATION SUBSECTION 1102 FOR DURABILITY CLASS 1.

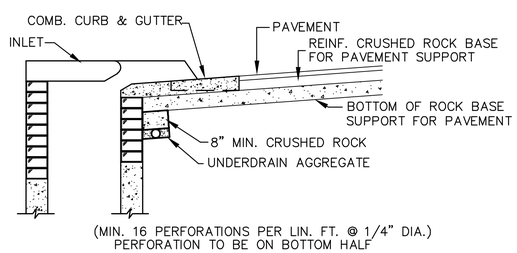

SECTION A–A

NOTE: PLACE 4" PVC PERFORATED PIPE AT ALL DRAINAGE SUMP LOCATIONS.
COST OF UNDERDRAIN SYSTEM TO BE INCIDENTAL TO THE REINFORCED CRUSHED ROCK SUBGRADE.
INLET TYPE MAY VARY FROM THAT SHOWN.

PAVEMENT UNDERDRAIN DETAIL

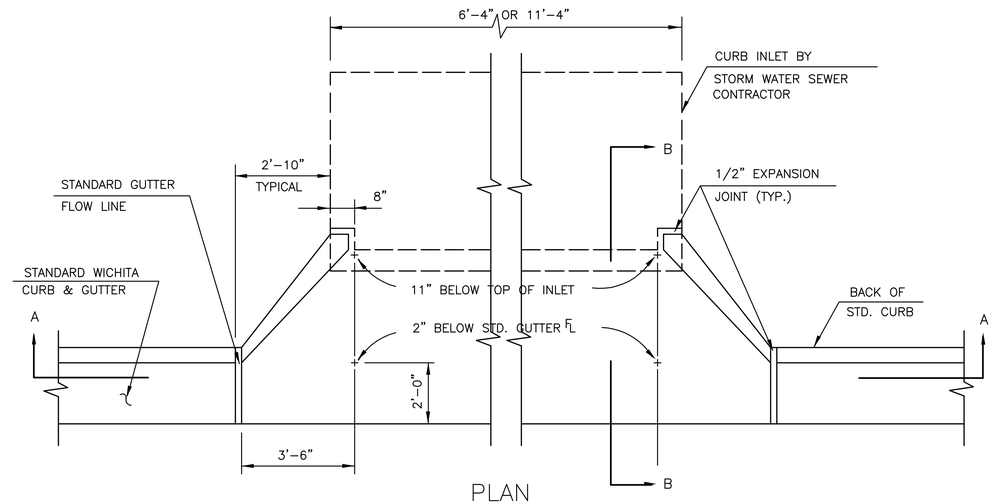

PLAN

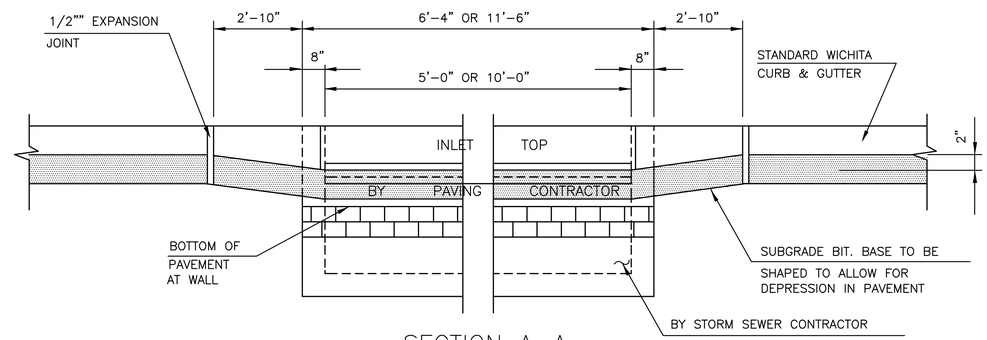

SECTION A–A

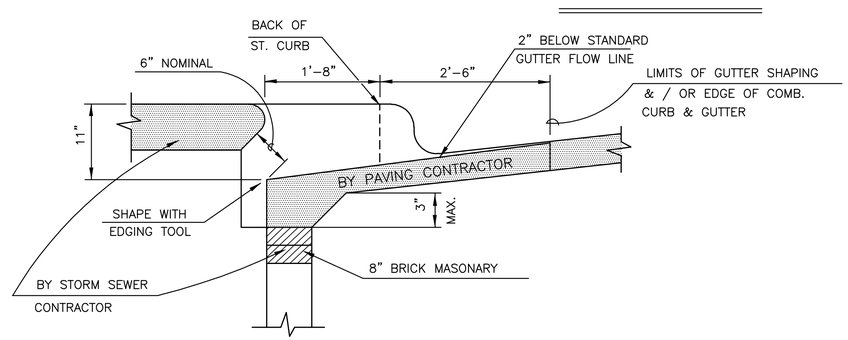

SECTION B–B

TYPE 1A INLET HOOKUP

(BY PAVING CONTRACTOR)

GENERAL NOTES

1. USE THE CONCRETE MIX SPECIFIED FOR CITY OF WICHITA CONCRETE PAVEMENT. ALL EXPOSED EDGES SHALL BE FINISHED WITH AN EDGING TOOL.
2. TYPE 1A INLET HOOKUP WILL BE PAID EACH REGARDLESS OF SIZE.
3. ADDITIONAL CURB & GUTTER CONSTRUCTION NECESSARY TO CONNECT SET BACK INLET TO PAVEMENT WILL BE PAID FOR AT THE UNIT PRICE BID FOR EACH INLET

MKEC
Wichita, KS · 316-684-9600

PAVING PLANS FOR
BAY COUNTRY ADDITION
WICHITA, KS

©2013
MKEC Engineering
All Rights Reserved
www.mkec.com
These drawings and their contents, including, but not limited to, all concepts, designs, & ideas are the exclusive property of MKEC Engineering (MKEC), and may not be used or reproduced in any way without the express consent of MKEC.

INLET HOOKUP DETAIL

PROJECT NO.	472-85103
DATE	OCT. 2013
SCALE	N/A

DESIGNED	DRAWN	CHECKED
MKEC	MKEC	MKEC

NO.	REVISION	DATE

SHEET NO.
7 OF 27

PLOTTED: Tuesday, October 15, 2013 @ 02:21PM
J:\PROJECTS\2013\130101038_COW BAY COUNTRY DEVELOPMENT\5-CIVIL\CAD\PAV\1538_EDX.DWG